dormakaba

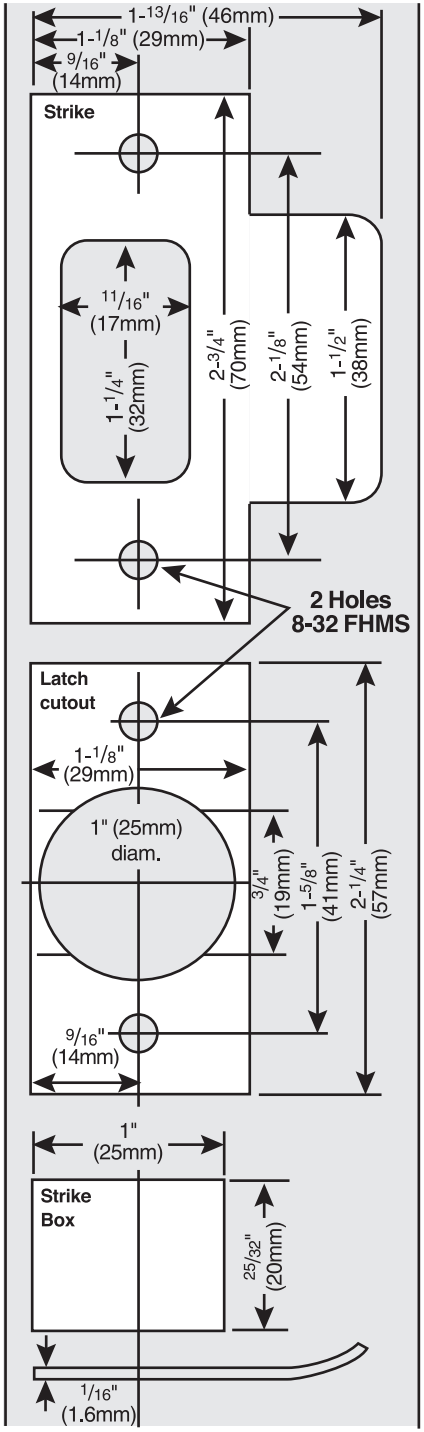

Template B (with passage set) right-hand

CAUTION Apply template and drill from outside, but compensate for door bevel if any.

For 2-3/4" (70mm): This flap folds over the edge of the door.
Ensure the fold is exactly on the line.
For 2-3/8" (60mm): This flap folds over the edge of the door.
Ensure the fold is exactly on the line.

CAUTION: Mark accurately. Bore straight.

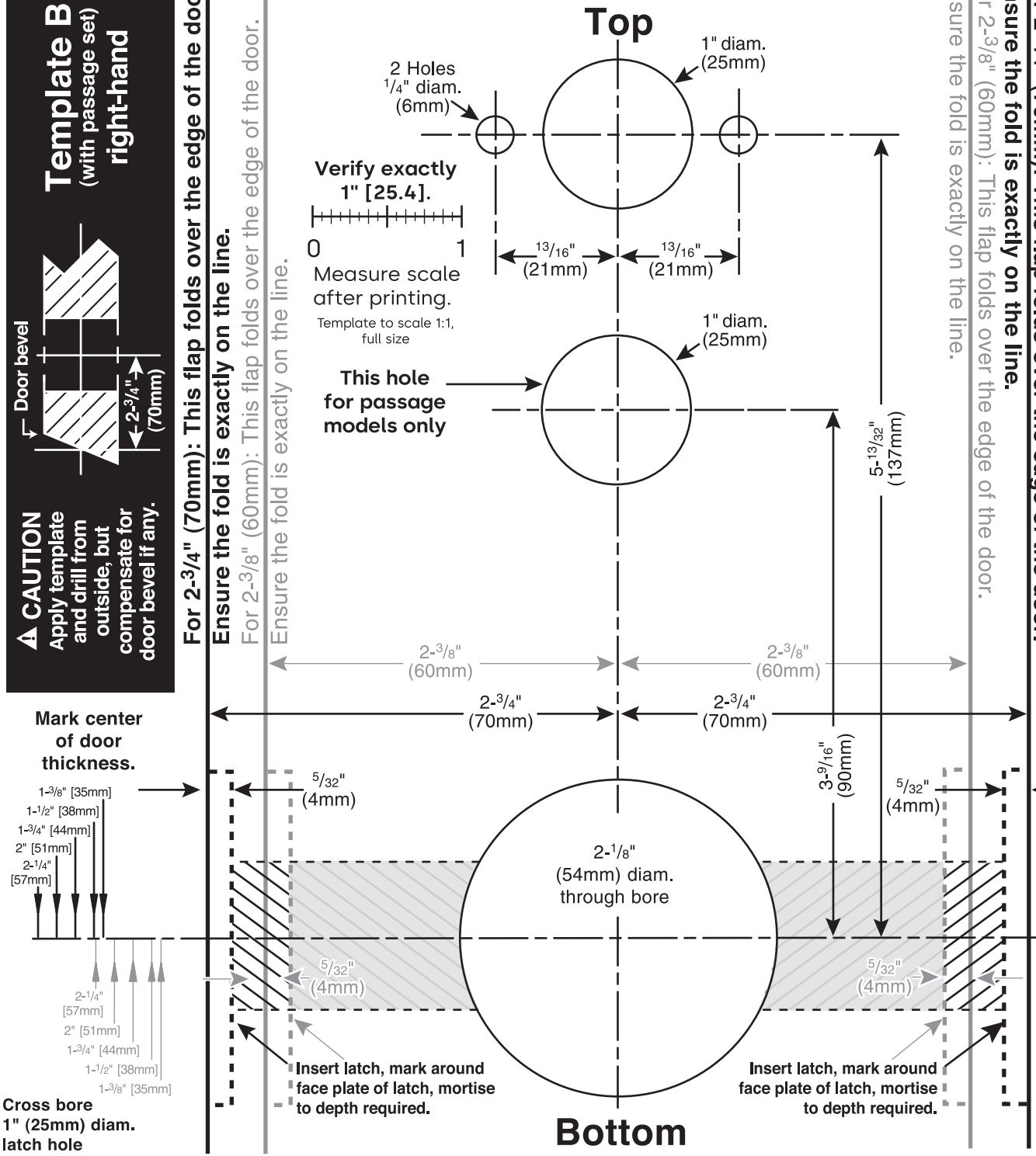

Template B (with passage set) left-hand

NOTE: Lock will accommodate doors 1-3/8" (35mm) to 2-1/4" (57mm) thick. Suitable reinforcement shall be provided by the hollow metal door manufacturer to prevent collapsing of door. When door silencers are to be installed, proper allowances must be made for strike location.

For 2-3/4" (70mm): This flap folds over the edge of the door.
Ensure the fold is exactly on the line.
For 2-3/8" (60mm): This flap folds over the edge of the door.
Ensure the fold is exactly on the line.

For models 101x, 102x, 103x, 104x, L101x, L102x, L103x, L104x with ½" or ¾" latch bolts and L1076 with ¾" latch bolt.