TMP NO. 08279623	PAGE 1 OF 1	REV. 12/20	**Always consult dormakaba's web site for latest template at www.dormakaba.us or call 1-800-523-8483.**

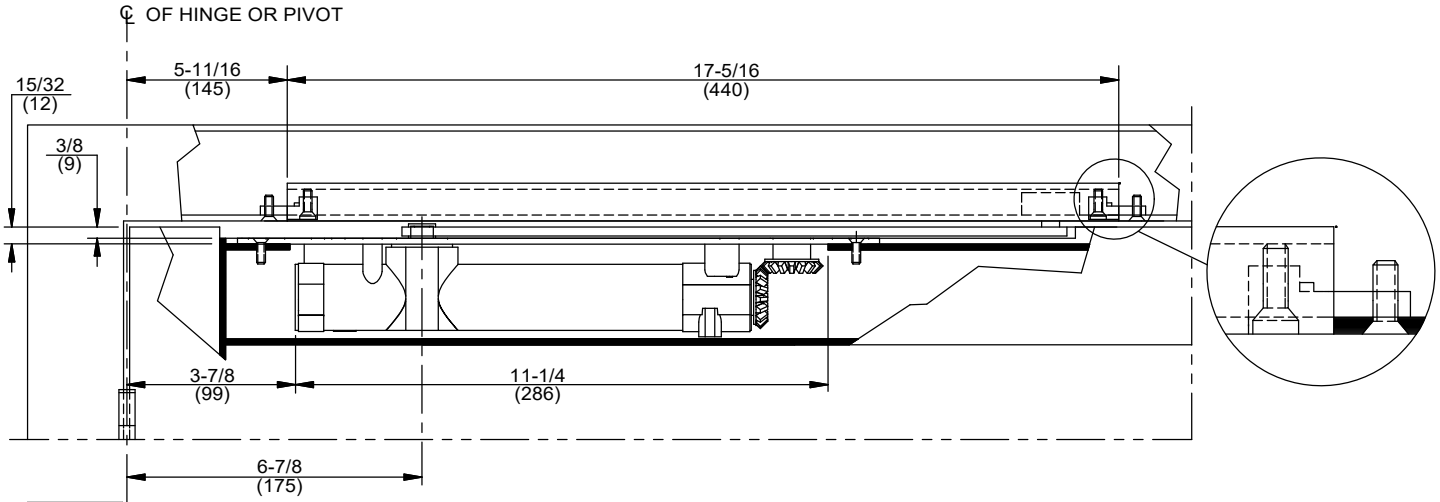

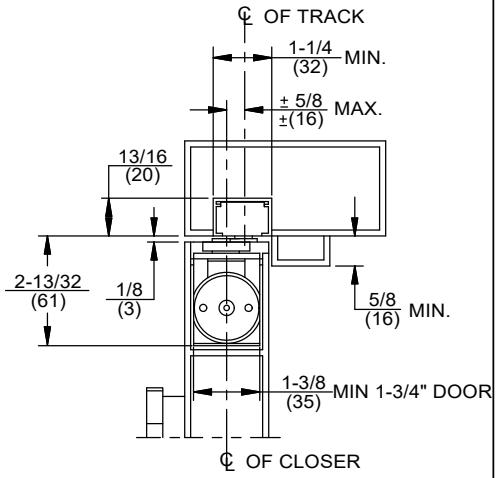

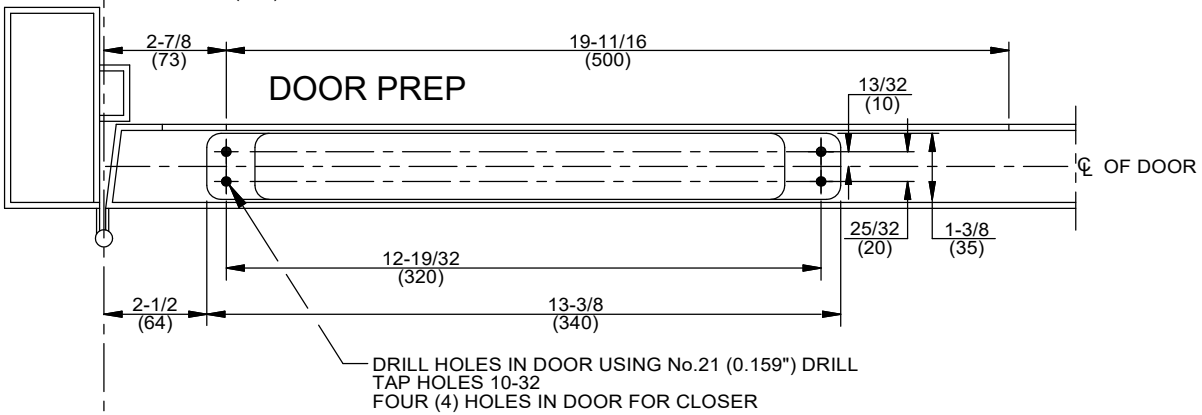

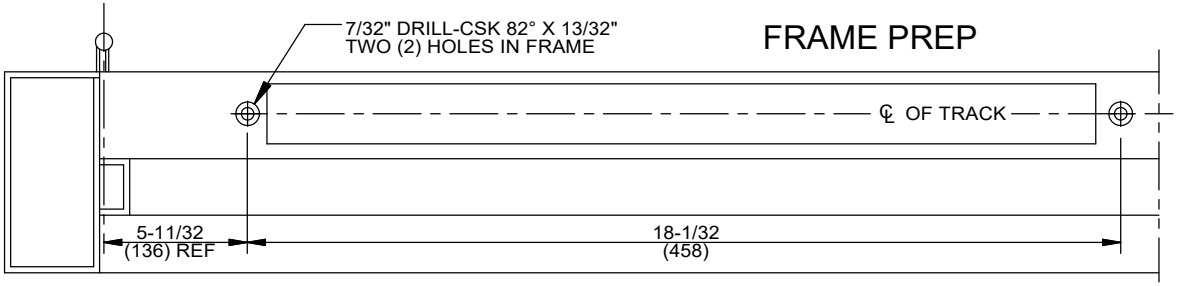

NOTES:

1. DO NOT SCALE DRAWING.
2. DIMENSIONS ARE IN INCHES/(MM).
3. RIGHT HAND DOOR SHOWN.
4. HOLD OPEN RANGE 80°-120°.
5. DOOR HUNG ON 4-1/2" X 4-1/2" BUTT HINGES OR 3/4" OFFSET PIVOTS- LESS TOP PIVOT.
6. THE TEMPLATING SHOWS THE LOCATION OF THE TRACK/CLOSER. NECESSARY REINFORCEMENT BY OTHERS.
7. THE ITS 96 MAY BE USED ON U.L. LISTED MANUFACTURERS WHO HAVE THE PREPARATION METAL DOORS AND FRAMES SUPPLIED BY FOR THIS CLOSER INCLUDED IN THEIR U.L. PROCEDURE. CHECK WITH THE DOOR/FRAME MANUFACTURER TO CONFIRM THAT ITS 96 PREPARATION IS INCLUDED.
8. MAXIMUM OPENING APPROX. 130°
9. SEE BROCHURE FOR MAXIMUM DOOR WIDTH.

DOOR CLOSER MODEL: ITS9613 STD

CLOSER IN DOOR TRACK IN FRAME

WITH ACCESSORY TRACK BRACKETS

(METAL DOOR AND FRAME)

dormakaba

dormakaba USA Inc
800 523 8483