70040
VAROS

Changeable lock with dead bolt for safes CEN III-V.
Approx. 10 million theoretical variations.
Standard footprint.

The lock offers an unprecedented change to a new key set from the front side only by means of the user key and without additional tools. It can be specified as factory coded or in change position. If delivered in change position works keys are not required.
The new „Mini Bit“ key geometry allows a simple installation in safes that are prepared for installation of mechanical or electronic combination locks. No special key hole design is required.

Basic Features

Lock
VAROS - Standard

Order code
70040

Approvals/Certificates
EN 1300 B, ECB-S, VdS class 2, UL437

Specifications
Changeable lock
9 levers, electrolytic galvanised steel
Key retained when in open position
Die-cast lock case and bolt
Bolt with 2 M4 threads, throw 8,5 mm
Compatible to mechanical and electronical spindle locks
Weight approx. 550 g

Admissible mounting positions
Right hand lock, opening clockwise

Options & Accessories

Options
Delivery in change position
Left hand lock, opening counter-clockwise

Option code
AUP
SLG

Accessories
Microswitch for bolt monitoring, retrofittable
Escutcheon plate, set
Lock fixing screw: cheese head screw galvanised, DIN 84 - BSW ¼“ x 39 mm - 4.8, securing ring
Lock fixing screw: cheese head screw galvanised, DIN 84 - M 6 x 37 mm - 4.8, securing ring
Key guiding tube, brass, diameter 11 mm, length 1 m
Leather pouch for detachable bit part

Order number
3 118 000 710
3 118 000 700
3 118 000 000
3 118 000 720
2 107 000 020
1 408 999 900

Works Keys

Keys Material	Length, Ø stem [mm]	Usable length [mm]	Key bow	Order number
User double-bitted keys, nickel-plated				
High-strength brass	120, Ø 9	65	Mauer	2 125 001 400
High-strength brass	80-360, Ø 9	xx	Mauer	3 105 7xx xxx

011 - Mechanical Key Locks

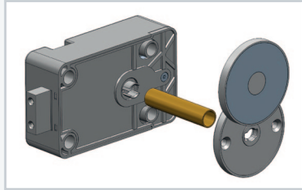

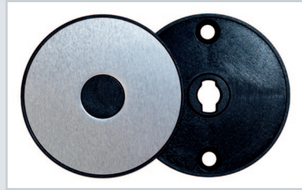

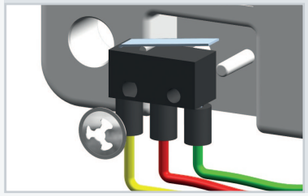

70040 VAROS

- Lock with „Mini Bit“ key
- Key guiding tube with escutcheon plate
- Escutcheon plate
- Retrofittable bolt switch contact

User Keys

Keys Material	Length, Ø stem [mm]	Usable length [mm]	Key bow	Option code
User double-bitted keys, nickel-plated				
Die-cast	120, Ø 9	65	Mauer	DSD120
Die-cast	150, Ø 9	95	Mauer	DSD150
Die-cast	164, Ø 9	109	Mauer	DSD164
High-strength brass	120, Ø 9	65	Mauer	DSS120
High-strength brass	80-360, Ø 9	xx	Oval *	DSSxxx
User double-bitted keys with detachable mechanism, nickel-plated				
Steel	120-360, Ø 9		Oval *	DEMxxx
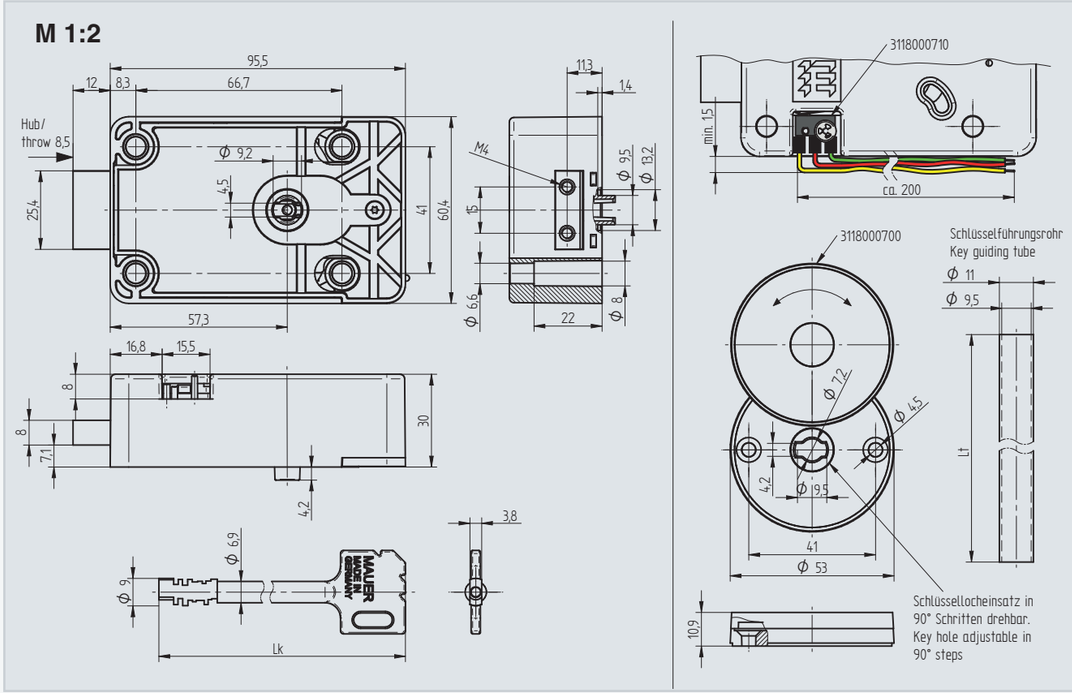
* Key bow with Mauer-Design on request