DORMA Automatics, Inc
924 Sherwood Drive
Lake Bluff, Illinois 60044

Toll Free: (877)-367-6211
Fax: (877)423-7999

THE STANDARD PACKAGE CONSISTS OF:

THE AUTOMATIC DOOR OPERATOR & HOUSING, FRAMES, DOORS, SIDELITES WITH VERTICAL AND HORIZONTAL WEATHERSTRIP, 2-POINT LOCKING, BREAKAWAY DEVICE, CONCEALED CONTROL PANEL (OFF, AUTO, HOLD-OPEN, REDUCED OPENING, EXIT ONLY ACTIVATION)

STANDARD FINISHES: CLEAR BHMA 204
DARK BRONZE BHMA 313

SPECIAL FINISHES ARE AVAILABLE

DRAWING DIMENSIONS ARE IN ENGLISH AND METRIC UNITS. METRICS ARE SHOWN IN MILLIMETERS, AS FOLLOWS: 1" (25.4)

FOR MAXIMUM CURRENT DRAW, SEE PRODUCT SPECIFICATION OR INSTALLATION INSTRUCTIONS.

REFER TO APPLICAPABLE LOCAL, STATE OR NATIONAL BUILDING CODE FOR MINIMUM DOOR HEIGHTS AND WIDTHS FOR ALLOWABLE EGRESS REQUIREMENTS. SEE REFERENCE TABLE BELOW.

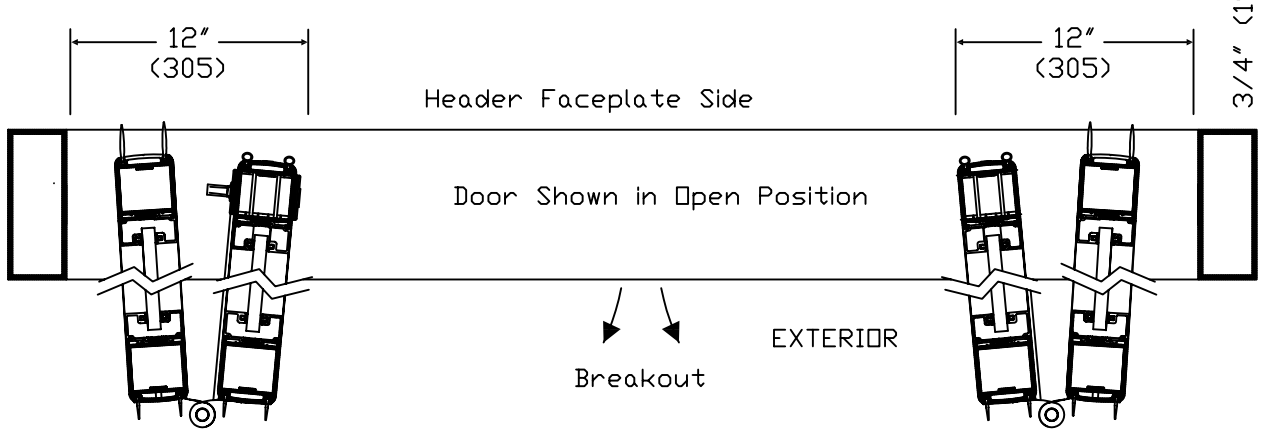

STANDARD PACKAGE SIZES

STANDARD UNIT SIZE WIDTH	HEIGHT	MAXIMUM CLEAR OPENING AT BREAKOUT	ROUGH OPENING WIDTH	HEIGHT
72" (1828)	7'-6" (2286)	59 1/4" (1504)	72 1/2" (1840)	7'-6 1/4" (2292)
84" (2133)	7'-6" (2286)	71 1/4" (1810)	84 1/2" (2146)	7'-6 1/4" (2292)
96" (2438)	7'-6" (2286)	83 1/4" (2115)	96 1/2" (2451)	7'-6 1/4" (2292)

Note: Dimensions in ( ) are mm

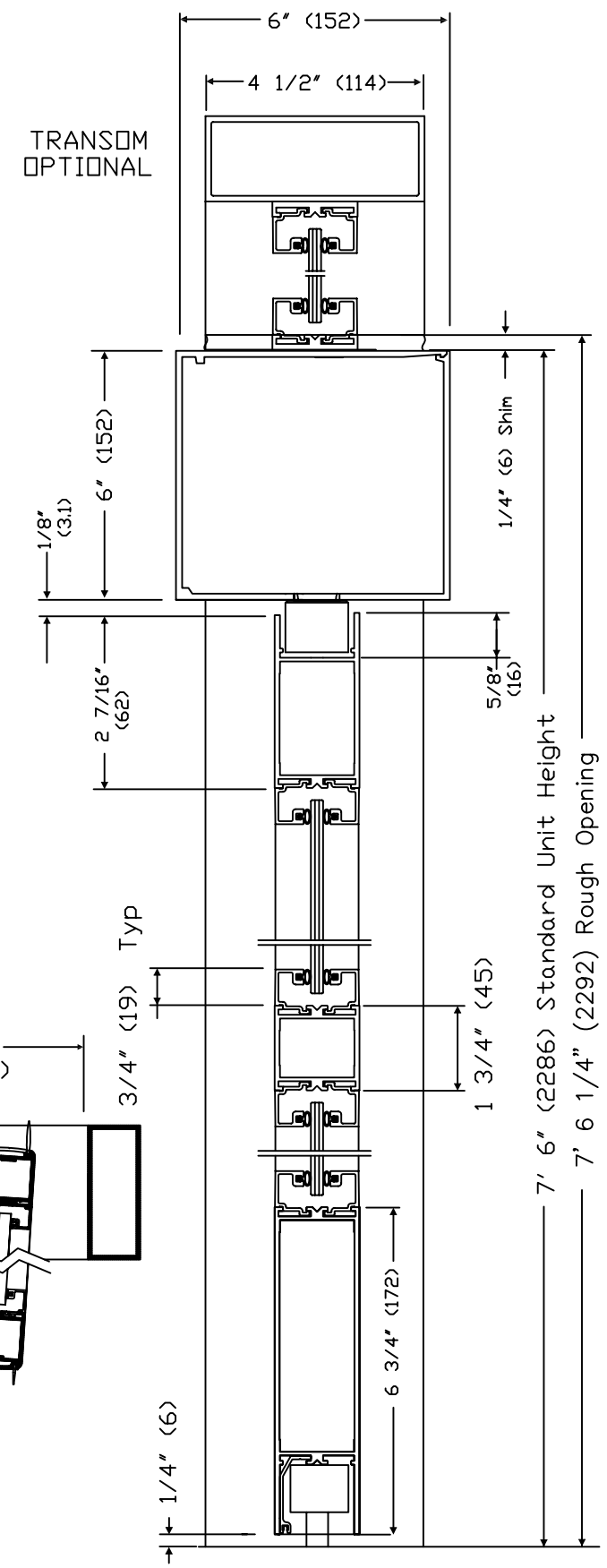

SECTION 1

Door Shown in Closed Position

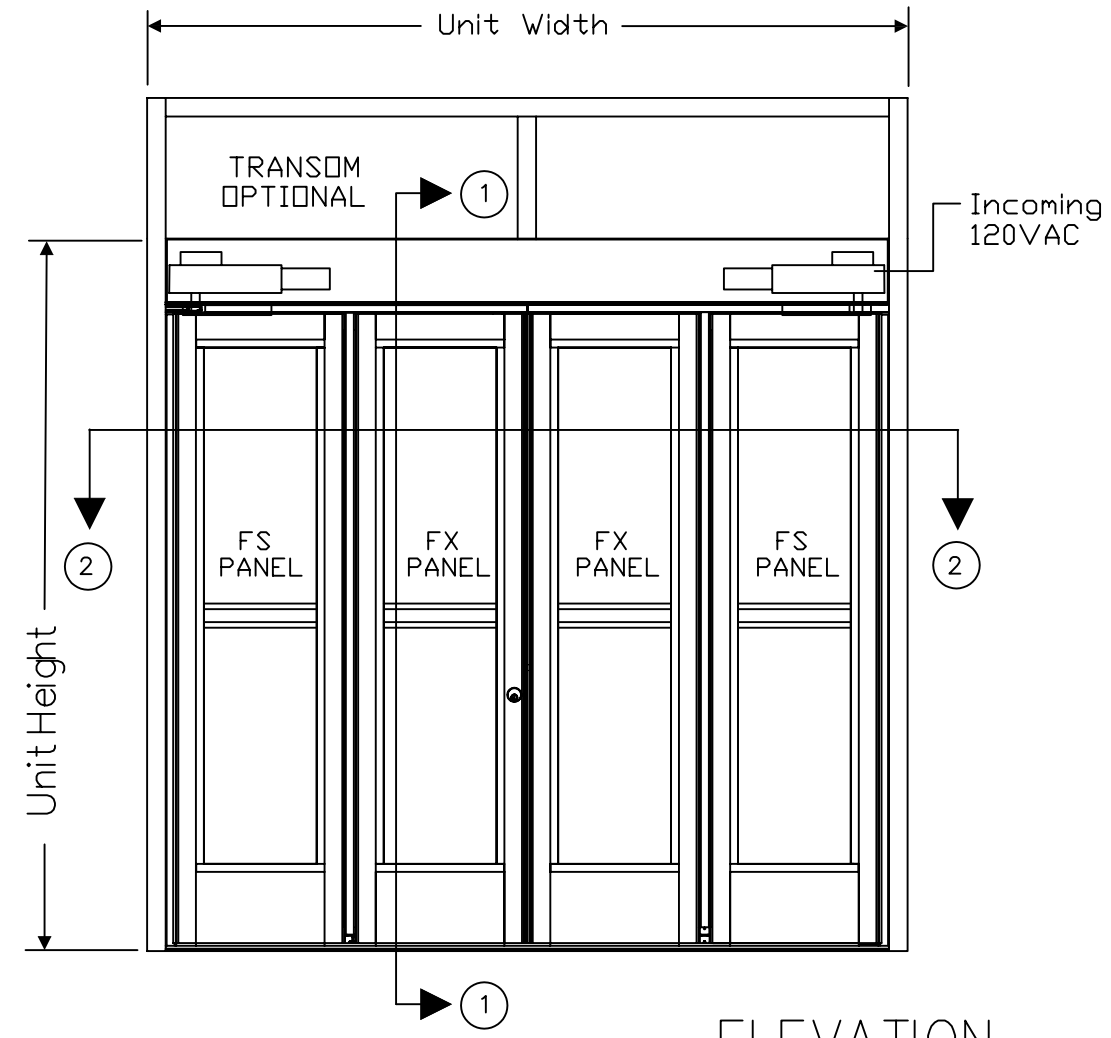

ELEVATION

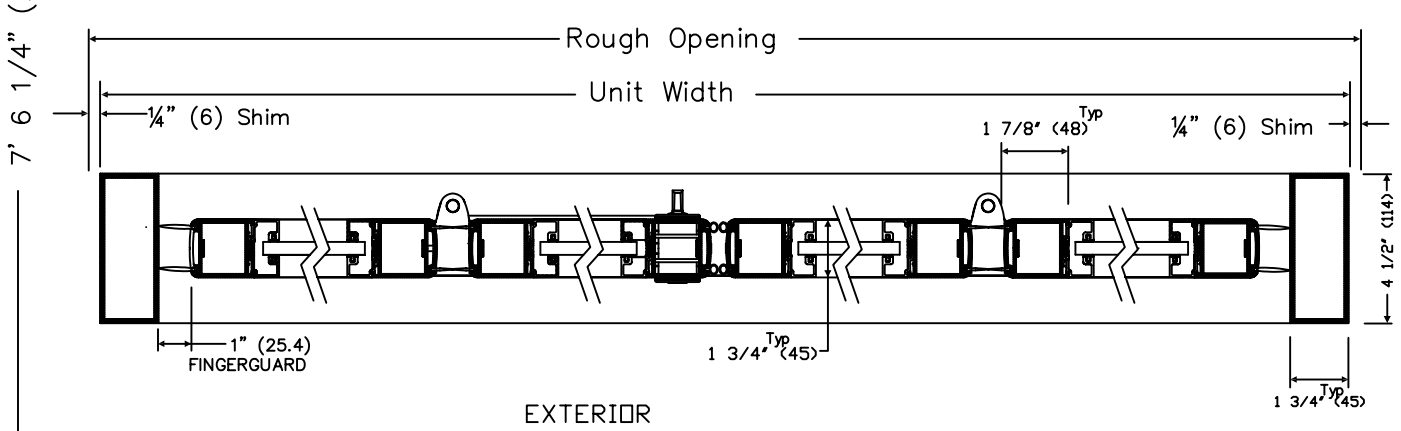

SECTION 2

Door Shown in Closed Position

AUTOMATIC BI-FOLDING DOOR
ED 1200 SERIES - PAIR
DORMA
FOLD OUT - BREAKOUT
12/06