DORMA Automatics, Inc
924 Sherwood Drive
Lake Bluff, Illinois 60044

Toll Free: (877)-367-6211
Fax: (877)423-7999

THE STANDARD PACKAGE CONSISTS OF:

THE AUTOMATIC DOOR OPERATOR & HOUSING, FRAMES, DOORS, SIDELITES WITH VERTICAL AND HORIZONTAL WEATHERSTRIP, EMERGENCY BREAKAWAY, 2-POINT LOCKING, CONCEALED CONTROL PANEL (OFF, AUTO, HOLD-OPEN, REDUCED OPENING, EXIT ONLY ACTIVATION)

STANDARD FINISHES: CLEAR BHMA 204
DARK BRONZE BHMA 313

SPECIAL FINISHES ARE AVAILABLE

DRAWING DIMENSIONS ARE IN ENGLISH AND METRIC UNITS. METRICS ARE SHOWN IN MILLIMETERS, AS FOLLOWS: 1" (25.4)

FOR MAXIMUM CURRENT DRAW, SEE PRODUCT SPECIFICATION OR INSTALLATION INSTRUCTIONS.

REFER TO APPLICAPABLE LOCAL, STATE OR NATIONAL BUILDING CODE FOR MINIMUM DOOR HEIGHTS AND WIDTHS FOR ALLOWABLE EGRESS REQUIREMENTS. SEE REFERENCE TABLE BELOW.

STANDARD PACKAGE SIZES

STANDARD UNIT SIZE		MAXIMUM SLIDE OPENING	ROUGH OPENING		BREAKOUT
WIDTH	HEIGHT		WIDTH	HEIGHT	
7'-0"(2134)	7'-8"(2337)	35" (889)	7'-0 1/2"(2146)	7'-8 1/4"(2343)	75"(1905)
8'-0"(2438)	7'-8"(2337)	41" (1041)	8'-0 1/2"(2451)	7'-8 1/4"(2343)	87"(2210)
8'-6"(2591)	7'-8"(2337)	44" (1118)	8'-6 1/2"(2604)	7'-8 1/4"(2343)	93"(2362)
9'-0"(2743)	7'-8"(2337)	47" (1194)	9'-0 1/2"(2756)	7'-8 1/4"(2343)	99"2515)

* Note: Dimensions in ( ) are mm.

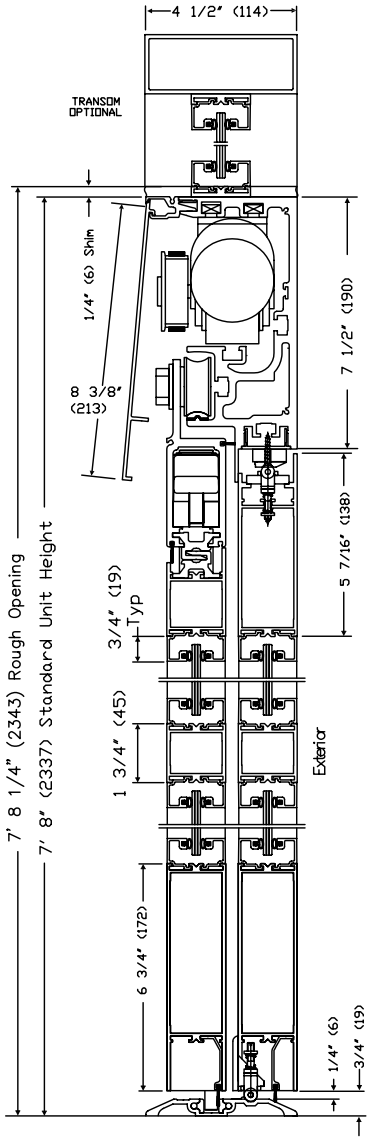

SECTION 1 TYPE SO-SX, SX-SO

Door Shown in Open Position

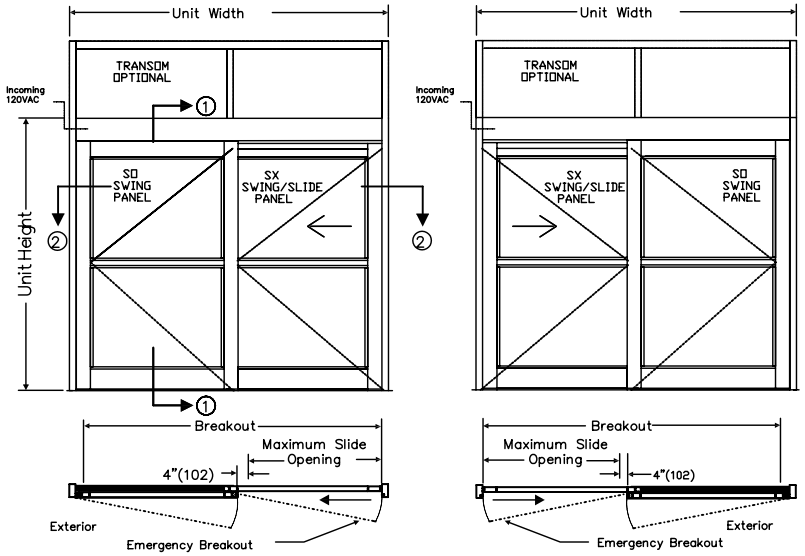

ELEVATION/PLAN TYPE SO-SX and SX-SO

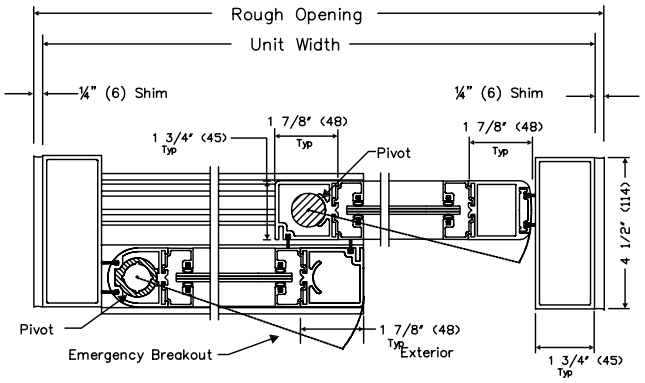

SECTION 2 TYPE SO-SX Shown, SX-SO Opposite

AUTOMATIC SLIDING DOOR
ESA-300 SERIES
TYPE SO-SX, SX-SO
Narrow Stile
3/06