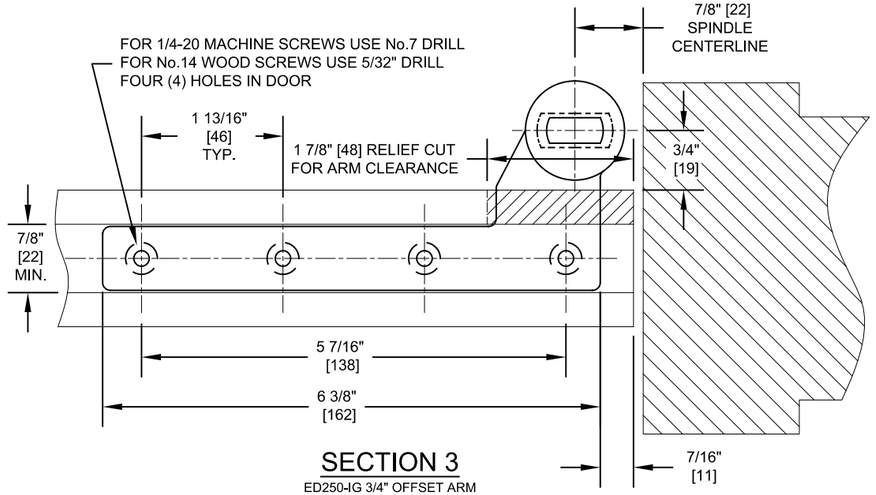

SECTION 3
ED250-IG 3/4" OFFSET ARM

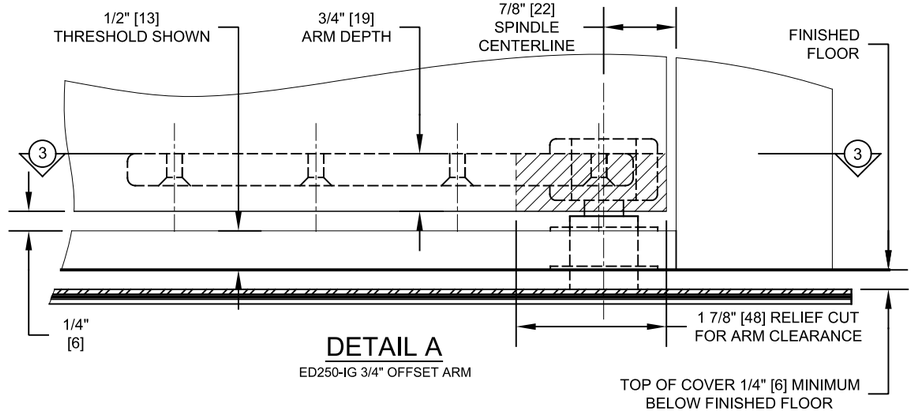

DETAIL A
ED250-IG 3/4" OFFSET ARM

1. The ED250-IG low profile automatic operator, Pair door package consists of:
   A. Operator:
      - Operator, Chain Drive, Pivot and Controller.
      - Case, Cover and Water tight seal.
      - PVC Connection Kit (DK3126)
      - Power supply for external sensors: 24VDC, 800mA.
      - Jamb mounted 3 function rocker switch panel: Hold Open, On & Off.
      - ED250 LE door leaf:
        - Up to 48" [1219] wide at 700 lbs [317].
      - ED250 FE door leaf:
        - Up to 48" [1219] wide at 700 lbs [317].
      - Operator is NOT handed, can be Left or Right.
   B. Arms:
      - 3/4" Offset arm shown (DC3123-010).
      - Center hung and Slide track arms available.
   C. Required ANSI Labels.

2. Finishes:
   A. 3/4" Offset arm:
      - Dark Bronze painted.
      - Silver painted.

3. Typical Package Options:
   A. dormakaba Upgrade cards. (See brochure for details).
      - Fire Protection upgrade card.
      - Barrier-Free Toilet upgrade card.

4. Drawing Notes:
   A. Drawing dimensions are in English & Metric units. Metric units are displayed as: 1" [25] millimeters.
   B. Operator Dimensions:
      - Cement case: 7" [177] wide x 4 7/8" [124] high x 35 1/2" [901] long.
      - Typical block out depth for the cement case is 5 1/2" [140] minimum.
      - Approximate pair operator weight: 60 lbs [26kg].
      - Door opening width Min. 5'-6 5/8" [1692].
   C. Maximum Opening Angle 110°.
   D. Not recommended for ANSI 156.10 use.

5. Power Requirements:
   A. 115V +/- 15%, 50/60 Hz, 6.6A peak (per operator). One operator per GFI circuit. Service to header by electrician.

6. Standards of Compliance:
   A. UL 325 & CSA 22.2 (listed with UL).
   B. Designed to comply with these standards depending on installation and application:
      - International Building Code (Section 1008).
      - ANSI/ BHMA 156.10 (Current version) (Requires monitored safety sensors). (May also require guide rails depending on configuration).
      - ANSI/ BHMA 156.19 (Current version (Requires additional knowing activation devices not shown in drawing).
      - NFPA 101 Life Safety Code (Section 7.2.1.9).
      - Electrical Safety Recognition: UL 50, CSA C22.2 # 94.1 (When weather seal is installed correctly).
   C. Refer to Local, State, National or AHJ. Building Code for minimum door height and minimum/maximum width allowable for egress requirements.
   D. Tested to UL 10C positive pressure fire test for door assembly.

7. Contact dormakaba Architectural Services for more information:
   A. Phone: 1-844-SPEC-NOW (1-844-773-2669)

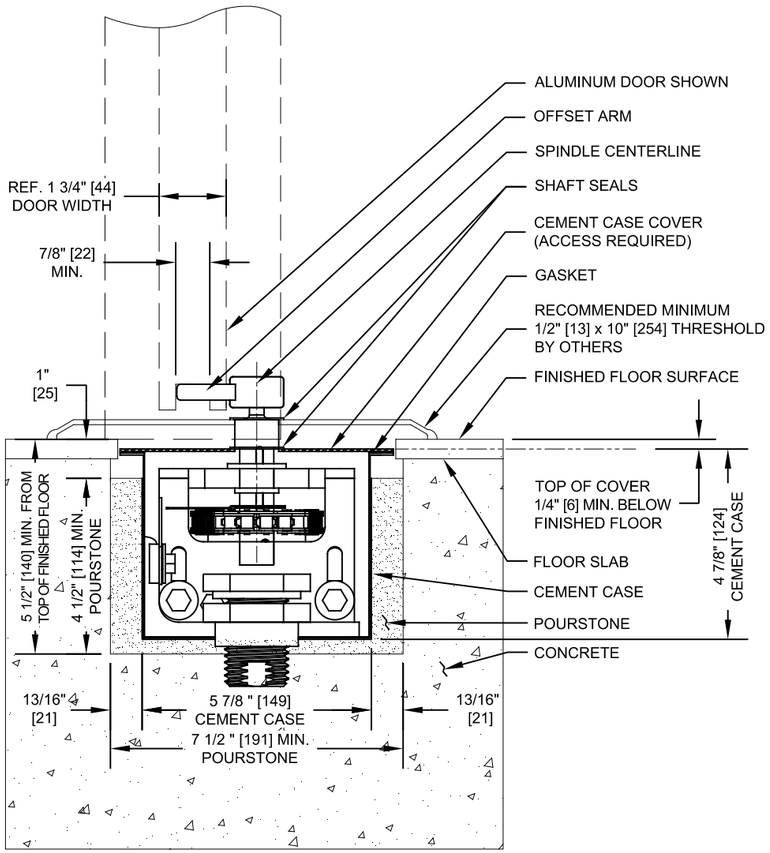

SECTION 2
ED250-IG 3/4" OFFSET OPERATOR

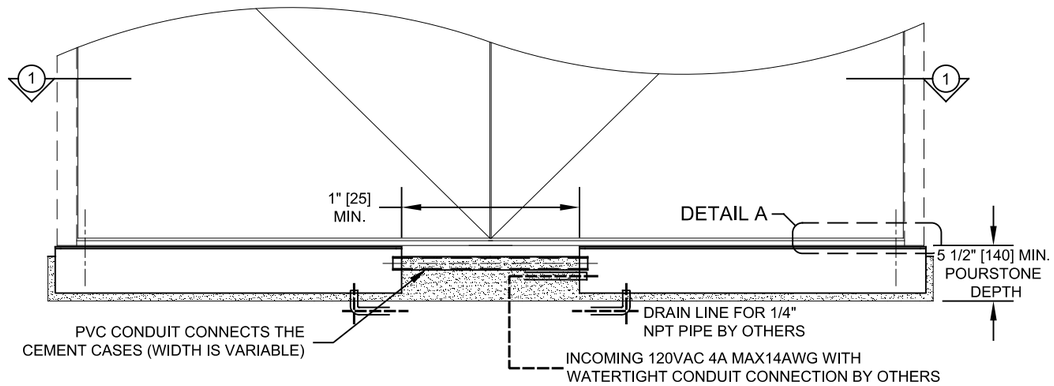

EXTERIOR ELEVATION
ED250-IG 3/4" OFFSET OPERATOR

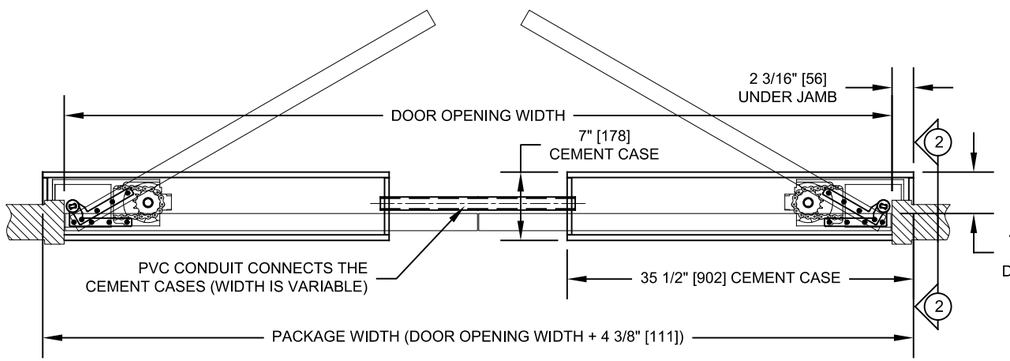

SECTION 1
ED250-IG 3/4" OFFSET OPERATOR

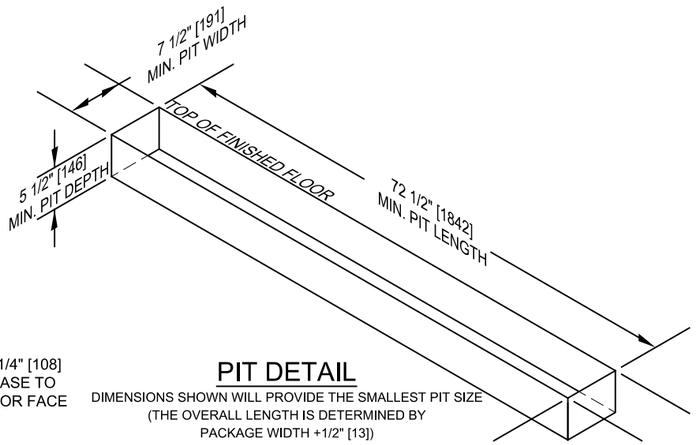

PIT DETAIL
DIMENSIONS SHOWN WILL PROVIDE THE SMALLEST PIT SIZE (THE OVERALL LENGTH IS DETERMINED BY PACKAGE WIDTH +1/2" [13])

ED250_IG_PAIR_OFFSET

dormakaba
1 Dorma Drive, Reamstown PA 17567 Phone: 717-336-3881

Drawing Title: **ED250 IG AUTOMATIC SWING DOOR**

PAIR **3/4" OFFSET PIVOT** **IN-GROUND OPERATOR**

© dormakaba Inc. Subject to Change Without Notice.

Date: 16-JUL-2018