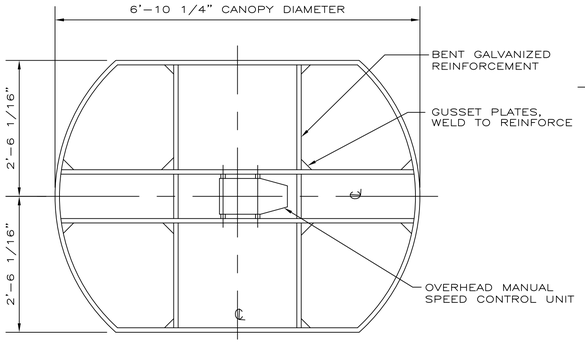

CANOPY REINFORCING PLAN
SCALE: 3/4" = 1'-0"

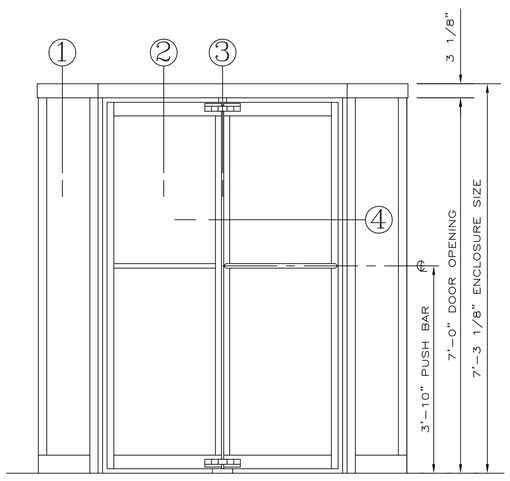

ELEVATION
ONE (1) DOOR REQUIRED THUS
SCALE: 3/4" = 1'-0"

NOTE: FLOOR UNDER REV. DR. MUST BE LEVEL

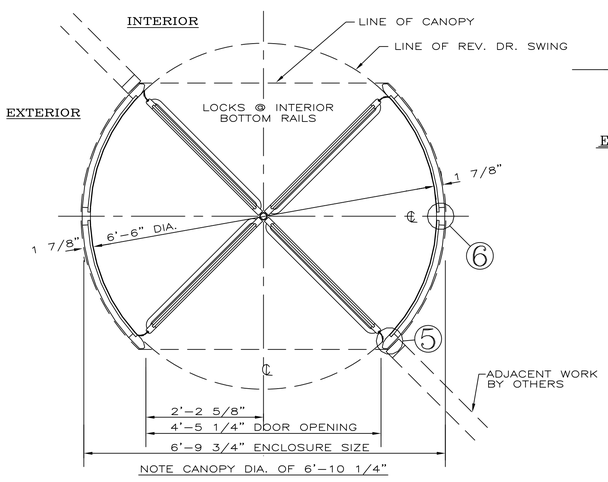

NOTE CANOPY DIA. OF 6'-10 1/4"

PLAN
SCALE: 3/4" = 1'-0"

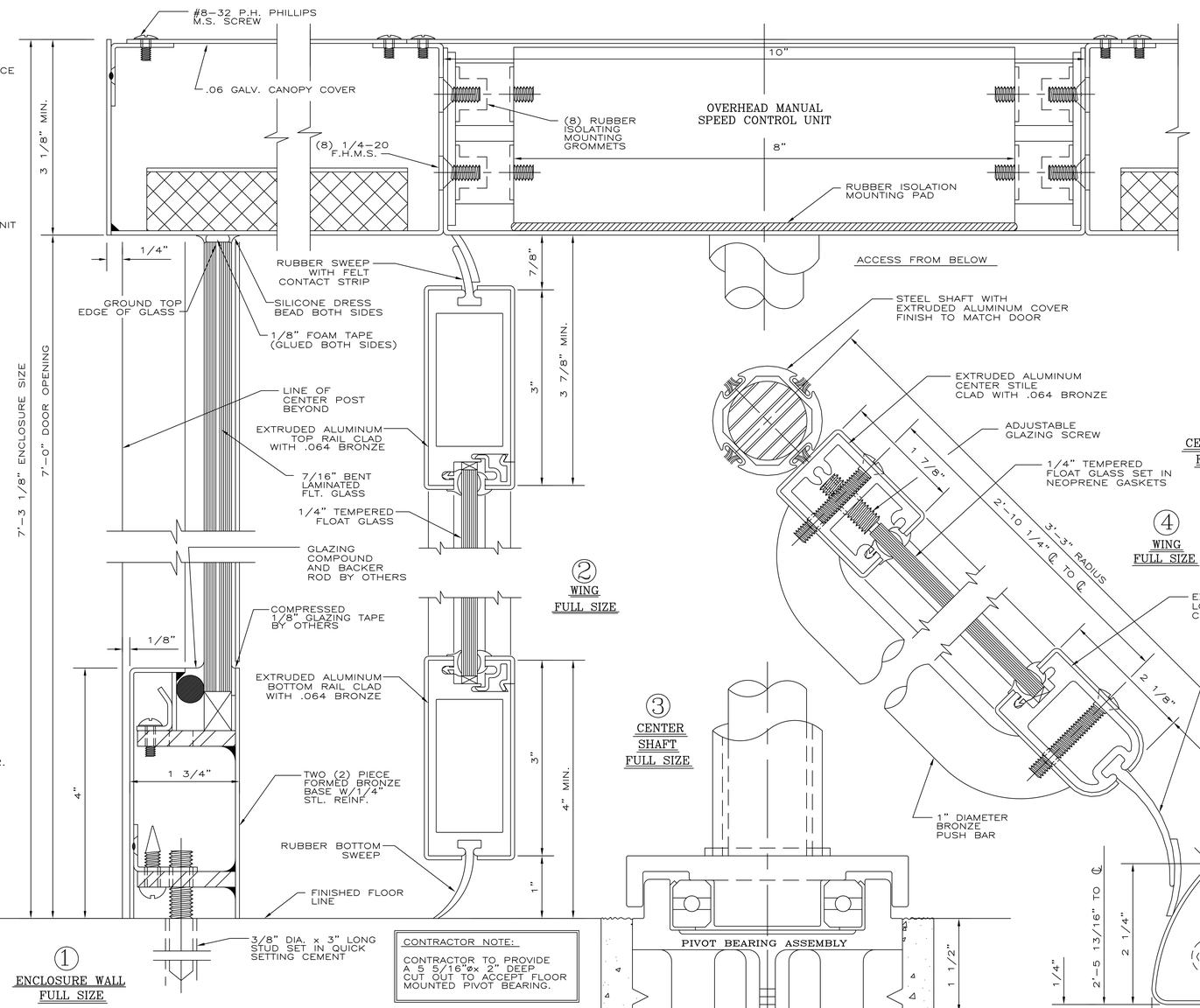

CONTRACTOR NOTE:

CONTRACTOR TO PROVIDE A 5 5/16"ø× 2" DEEP CUT OUT TO ACCEPT FLOOR MOUNTED PIVOT BEARING.

GENERAL NOTES

CONTRACTOR SHOULD CHECK & TAKE NOTE OF ALL DIMENSIONS AS C.D.C. (CRANE DOOR CO.) ASSUMES NO RESPONSIBILITY BEYOND MANUFACTURING IN ACCORDANCE WITH THE DIMENSIONS SHOWN ON SHOP DRAWINGS.

APPROVAL INDICATES THAT THIS SHOP DRAWING HAS BEEN CHECKED AND THAT YOU AUTHORIZE US TO FABRICATE MATERIALS AS SHOWN HERE-IN.

REVOLVING DOOR PERIMETER CAULKING (INCLUDING BASE SECTION TO FLOOR) AND CANOPY COVER CAULKING NOT BY C.D.C. ALL HOLES IN FLOOR NOT BY C.D.C.

MATERIAL TO BE:
MIN. .064 THICKNESS BRONZE SHEET 280 MUNTZ METAL & MIN. .125 THICKNESS BRONZE EXTRUSION CDA 385 ALLOY.
EXTRUDED ALUMINUM OF 6063-T52 ALLOY. (WINGS) (UNLESS OTHERWISE SPECIFIED)

FINISH TO BE:
SATIN AND LACQUERED

GLASS TO BE: CLEAR (TO MEET ANSI Z97.1 AND 16CFR1201
ALL TEMPERED GLASS TO HAVE SAFETY LOGOS.
IF ADDITIONAL LOGOS ARE REQUIRED PLEASE SPECIFY.)
1/4" TEMP. FLT. FOR WINGS
7/16" BENT LAMINATED FLT. FOR ENCLOSURE

HARDWARE SCHEDULE

1. OVERHEAD MANUAL SPEED CONTROL UNIT.
2. FLOOR MOUNTED PIVOT BEARING ASSEMBLY.
3. FULVIEW II PANIC PROOF BOOK-FOLD MECHANISM IN COMPLIANCE WITH ALL APPLICABLE REGULATIONS.
4. LOCKS: SPECIAL REV. DR. TYPE TWO (2) REQUIRED INSTALLED AT BOTTOM RAILS OF TWO ADJACENT WINGS FOR INTERIOR LOCKING.
5. CYLINDERS: STANDARD SIZE MORTISE TYPE, TWO (2) REQUIRED PER REV. DR. UNIT, TO BE SUPPLIED BY OTHERS TO C.D.C. FOR SHOP INSTALLATION.
6. PUSH BARS: 1" DIAMETER BRONZE. FINISH TO MATCH DOOR

INSTALLER NOTE:
BOOK-FOLD TENSION IS NOT PRESET; IT MUST BE ADJUSTED TO MEET BUILDING CONDITIONS.

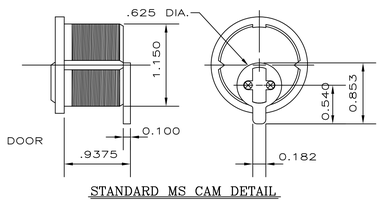

STANDARD MS CAM DETAIL
FULL SIZE

NOTE: PRIOR TO FABRICATION, SHOP DRAWINGS AND FINISH SAMPLES MUST BE FULLY APPROVED AND RETURNED TO C.D.C.

CDC CRANE DORMA
REVOLVING DOORS™

PHONE : 847-295-2700 FAX : 847-295-5288

SCALE : AS SHOWN	JOB NAME :		
DRAWN BY : JNP	XXX		
REVISIONS			
	LOCATION :	PLEASE ADVISE	
	ARCHITECT:	PLEASE ADVISE	
	CONTRACTOR :	PLEASE ADVISE	
	SUB. CONTRACTOR :	PLEASE ADVISE	
	MFG. REPRESENATIVE :	PLEASE ADVISE	
FAB. CHECK :	HDW. CHECK :		
CHECKED BY :	NOTES		
ORD. NO. :	X		
DATE : 2009	SHEET 1 OF 1		DRAWING NO. : BZ 2000 A