TMP No. 76019027	Page 1 of 1	Rev. 09/08	**Always consult DORMA's web site for latest template at www.dorma-usa.com or call 1-800-523-8483.**

NOTES:
1. DIMENSIONS ARE IN INCHES/ [MM]
2. DO NOT SCALE DRAWING.

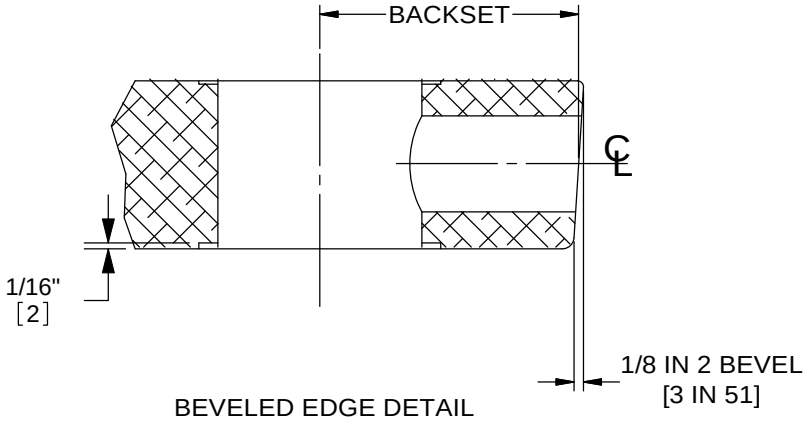

BEVELED EDGE DETAIL

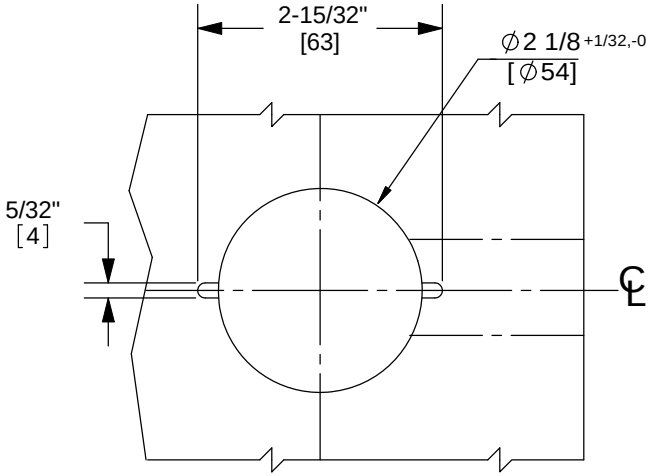

DOOR FACE DETAIL

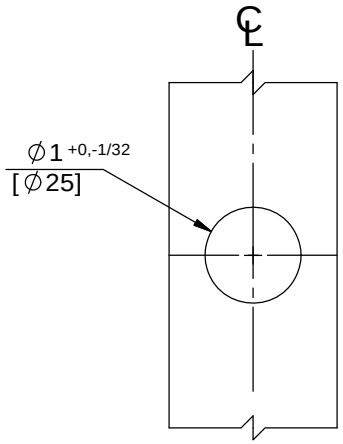

DOOR EDGE DETAIL

Wood Doors For:
C400, CL600, CK600 Series
Drive-in Latch

DORMA Architectural Hardware
Reamstown, PA 17567