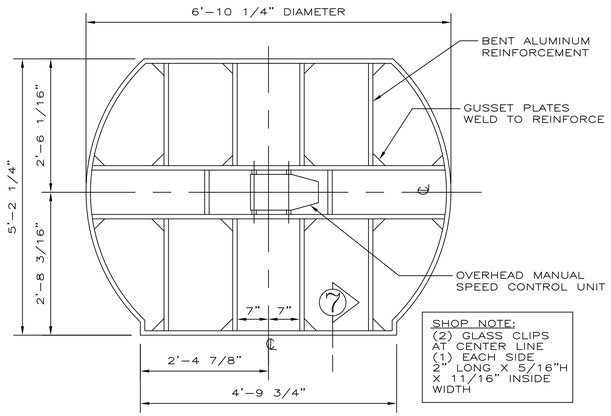


SHOP NOTE:
(2) GLASS CLIPS AT CENTER LINE
(1) EACH SIDE
2" LONG X 5/16"H X 11/16" INSIDE WIDTH

CANOPY REINFORCING PLAN
SCALE: 3/4" = 1'-0"

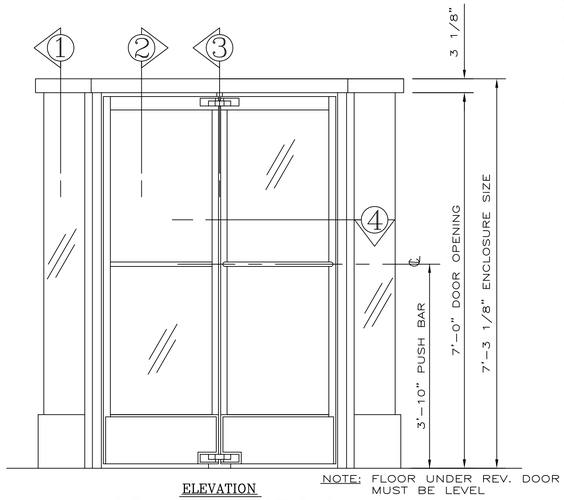


NOTE: FLOOR UNDER REV. DOOR MUST BE LEVEL

ELEVATION
ONE (1) DOOR REQUIRED THUS
SCALE: 3/4" = 1'-0"

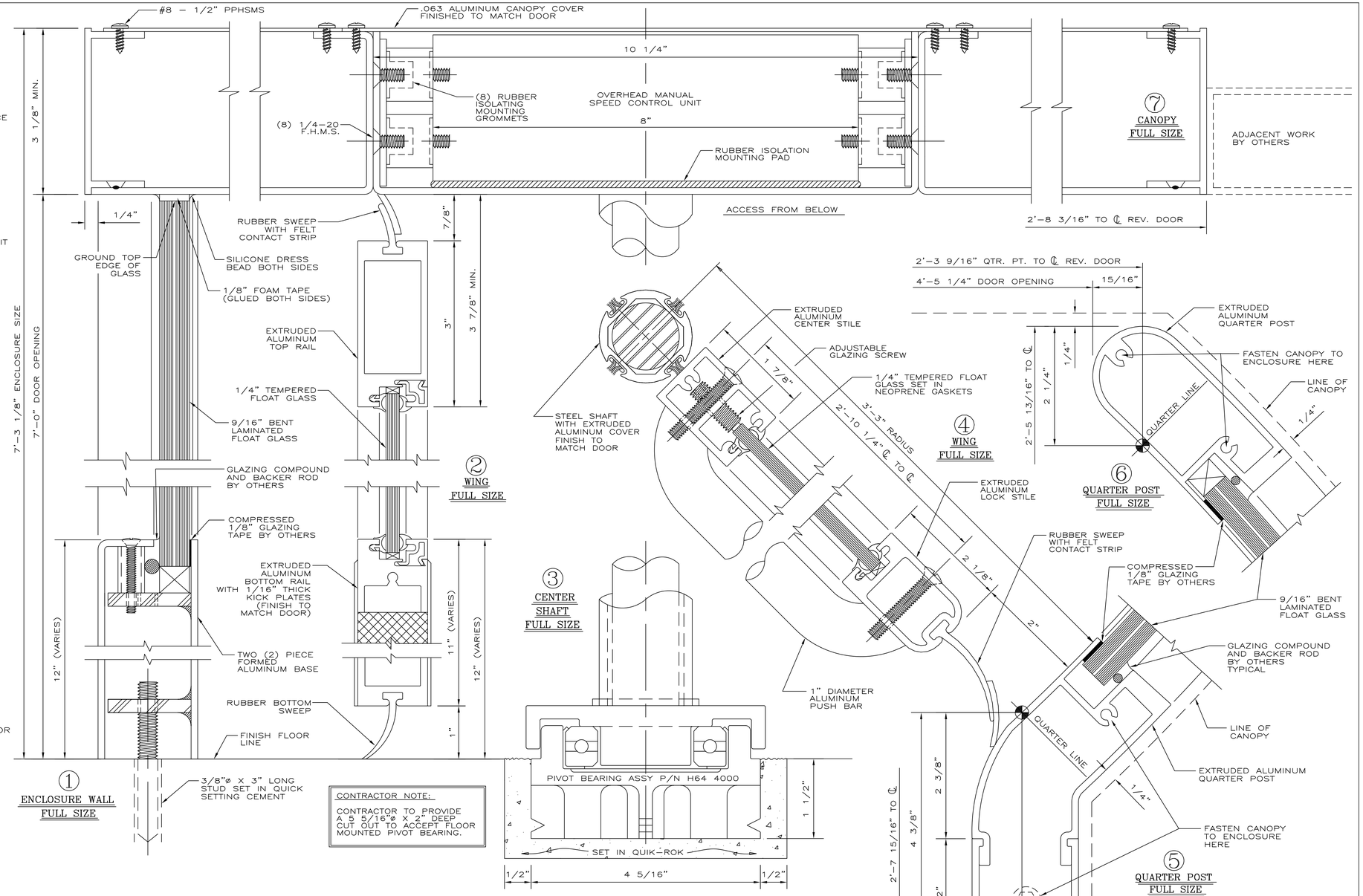


① ENCLOSURE WALL
FULL SIZE

② WING
FULL SIZE

③ CENTER SHAFT
FULL SIZE

④ WING
FULL SIZE

⑤ QUARTER POST
FULL SIZE

⑥ QUARTER POST
FULL SIZE

⑦ CANOPY
FULL SIZE

CONTRACTOR NOTE:

CONTRACTOR TO PROVIDE A 5 5/16"ø X 2" DEEP CUT OUT TO ACCEPT FLOOR MOUNTED PIVOT BEARING.

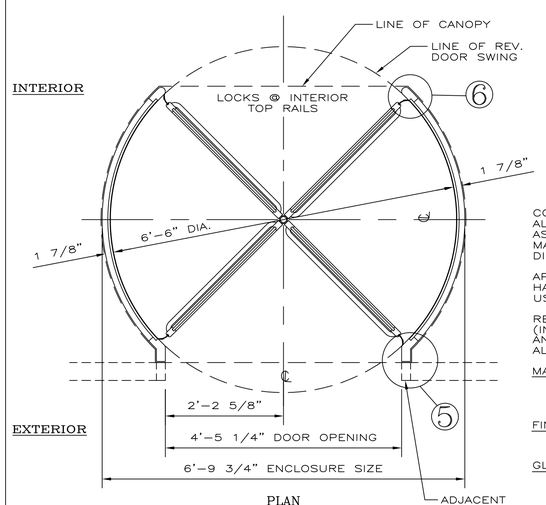


PLAN
SCALE: 3/4" = 1'-0"

## GENERAL NOTES

CONTRACTOR SHOULD CHECK & TAKE NOTE OF ALL DIMENSIONS AS C.D.C. (CRANE DOOR CO.) ASSUMES NO RESPONSIBILITY BEYOND MANUFACTURING IN ACCORDANCE WITH THE DIMENSIONS SHOWN ON SHOP DRAWINGS.

APPROVAL INDICATES THAT THIS SHOP DRAWING HAS BEEN CHECKED AND THAT YOU AUTHORIZE US TO FABRICATE MATERIALS AS SHOWN HERE-IN.

REVOLVING DOOR PERIMETER CAULKING (INCLUDING BASE SECTION TO FLOOR) AND CANOPY COVER CAULKING NOT BY C.D.C. ALL HOLES IN FLOOR NOT BY C.D.C.

MATERIAL TO BE:
EXTRUDED ALUMINUM OF 6063-T52 ALLOY.
SHEET ALUMINUM OF 5005-H34 AQ ALLOY.
(UNLESS OTHERWISE SPECIFIED)

FINISH TO BE:
CLEAR ANODIZED
AA-M32-C22-A41

GLASS TO BE: CLEAR
1/4" TEMPERED FLOAT FOR WINGS
9/16" BENT LAMINATED FLOAT FOR ENCLOSURE
GLASS TO MEET ANSI Z97.1 AND 16 CFR 1201.
ALL TEMPERED GLASS TO HAVE SAFETY LOGOS.
IF ADDITIONAL LOGOS ARE REQUIRED PLEASE SPECIFY.

## HARDWARE SCHEDULE

1. OVERHEAD MANUAL SPEED CONTROL UNIT.
2. FLOOR MOUNTED PIVOT BEARING ASSEMBLY.
3. FULVIEW II PANIC PROOF BOOK-FOLD MECHANISM IN COMPLIANCE WITH ALL APPLICABLE REGULATIONS.
4. LOCKS: SPECIAL REV. DOOR TYPE TWO (2) REQUIRED INSTALLED AT TOP RAILS OF TWO ADJACENT WINGS FOR INTERIOR LOCKING.
5. CYLINDERS: STANDARD SIZE MORTISE TYPE, TWO (2) REQUIRED PER REV. DOOR UNIT, TO BE SUPPLIED BY OTHERS TO C.D.C. FOR SHOP INSTALLATION.
6. PUSH BARS: 1" DIA. ALUMINUM, FINISH TO MATCH DOOR.

INSTALLER NOTE:
BOOK-FOLD TENSION IS NOT PRESET; IT MUST BE ADJUSTED TO MEET BUILDING CONDITIONS.

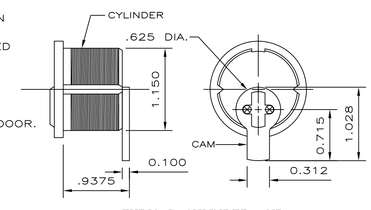


TYPICAL CYLINDER AND "STRAIGHT ARM" TYPE CAM REQUIRED SUPPLIED BY OTHERS
FULL SIZE
NOTE: ADAMS-RITE CAM MAY BE SUBSTITUTED

NOTE: PRIOR TO FABRICATION, SHOP DRAWINGS AND FINISH SAMPLES MUST BE FULLY APPROVED AND RETURNED TO C.D.C.

CDC CRANE DORMA
REVOLVING DOORS™

PHONE : 847-295-2700 FAX : 847-295-5288

| | | | |
|---|---|---|---|
| SCALE : AS SHOWN | JOB NAME : XXX | | |
| DRAWN BY : | | | |
| REVISIONS | | | |
| | LOCATION : | PLEASE ADVISE | |
| | ARCHITECT: | PLEASE ADVISE | |
| | CONTRACTOR : | PLEASE ADVISE | |
| | SUB. CONTRACTOR : | PLEASE ADVISE | |
| | MFG. REPRESENATIVE : | PLEASE ADVISE | |
| FAB. CHECK : | HDW. CHECK : | | |
| CHECKED BY : | NOTES X | | |
| ORD. NO. : | | | |
| DATE : 2009 | SHEET 1 OF 1 | | DRAWING NO. : AL 3000 H |