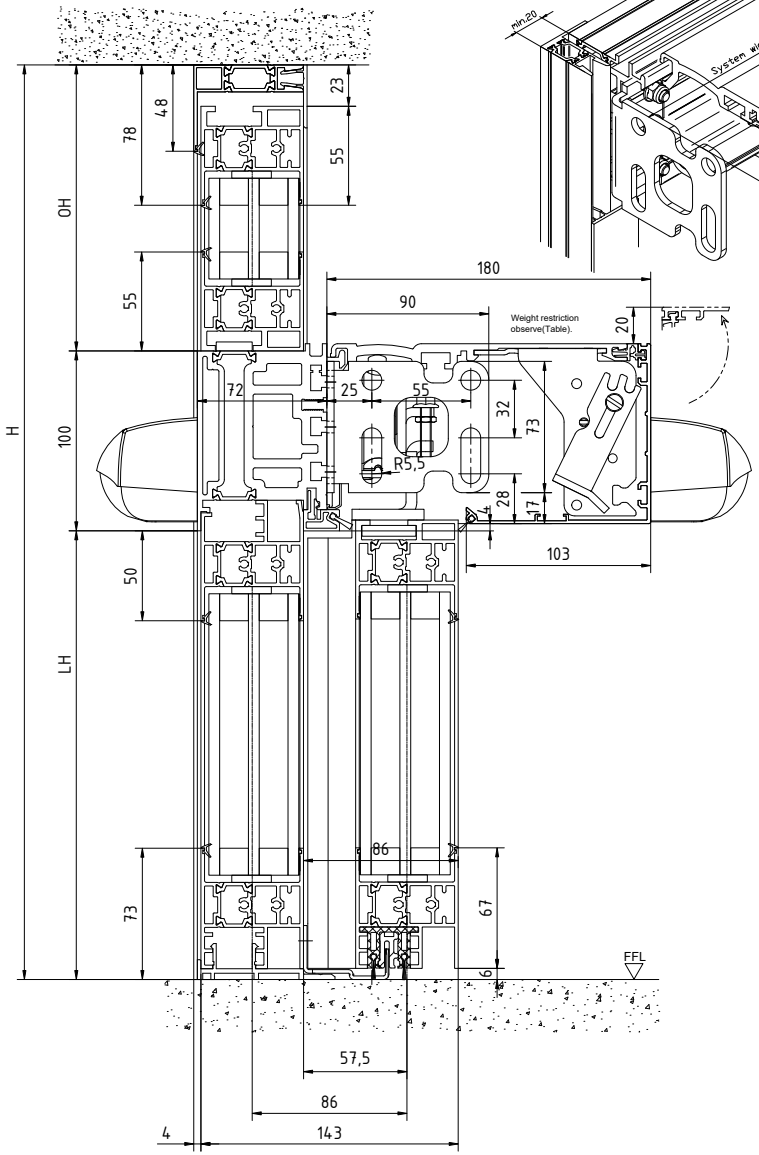

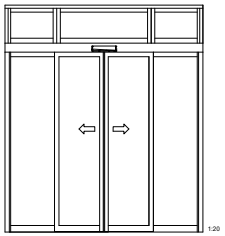

FFL	Finished floor level
LW	Passage width
LH	Clearance height
H	Installation height
	Noticed
X	According to EN 16005 / DIN 18650 Construction and testing principles for automatic. For doors, this dimension may only be 4 ÷ 8 mm.

Pro Green ES 250 PRO / ES 400 PRO	Weight
1-leaf LW 700 - 3000 B min. = 2 x LW + 153 (with fixed part / with post width 63mm)	1-leaf ES 250 PRO 1 x 125 kg ES 400 PRO 1 x 250 kg
2-leaf LW 800 - 3000 B min. = 2 x LW + 180 (with fixed part / without post width)	2-leaf Standard ES 250 PRO 2 x 125 kg ES 400 PRO 2 x 200 kg

For doors with side panels and LM supports (through mounting), from a door leaf weight of approx. 125kg - depending on the clear width of the door - either a drive suspension or the drive variant with a height of 150mm is required.

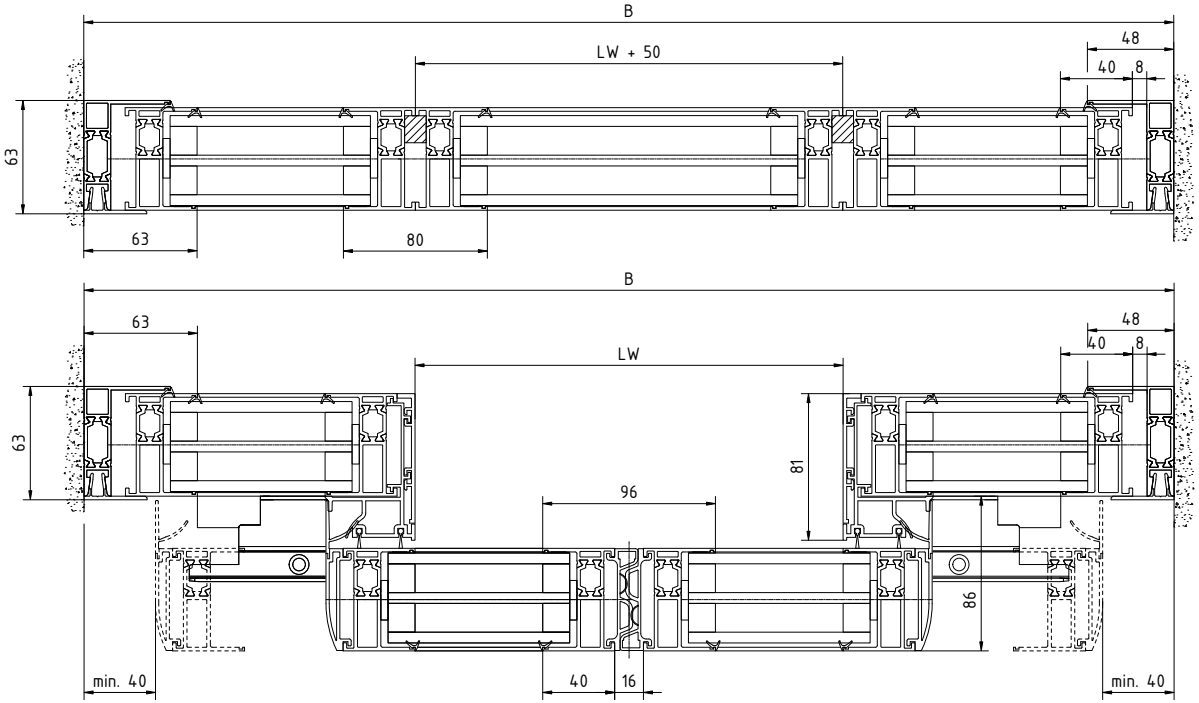

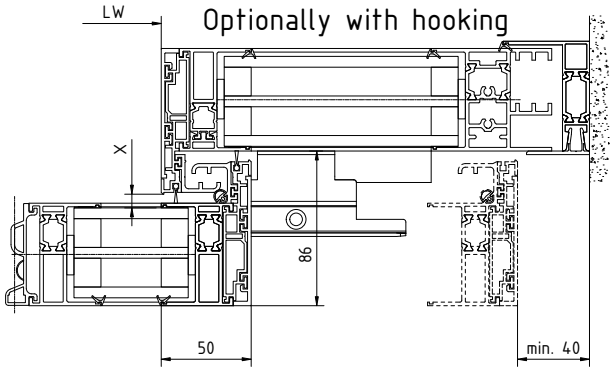

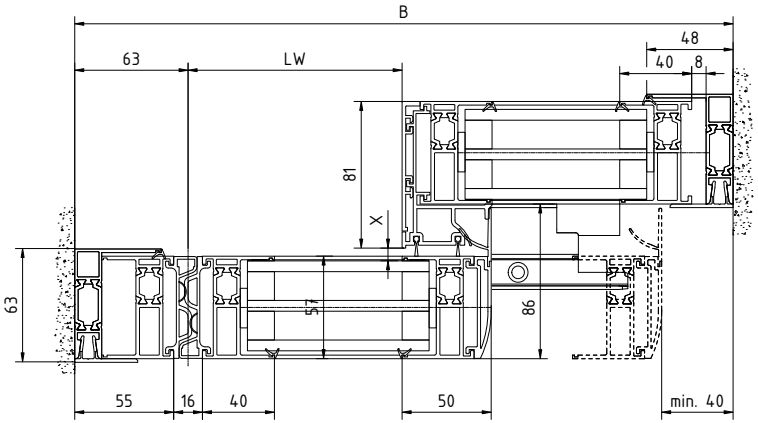

Attention !
the safety equipment of the automatic door must correspond to the risk analysis according to DIN 18650

3				Date	Name	Material	
2							
1			Drawn	10.2021	Renz		
No.	Change No.	Date	Name	Checked			
				Norm			

dormakaba GmbH+Co.KG (DE) Ennepetal

Scale: 1:1
Format: A0
Replacem.:

Drawing No.: 257691-00-6-60
Sheet: 1 of 1

dormakaba

ES PROLINE
Pro Green sliding door
insulating glass - with fixed part - floor guide

Ver.: 00

Transmission as well as reproduction of this document, use and communication of its contents are not permitted without express permission. Violations are subject to the payment of damages. All rights reserved, particularly in the case of patent grant or registration of utility model.

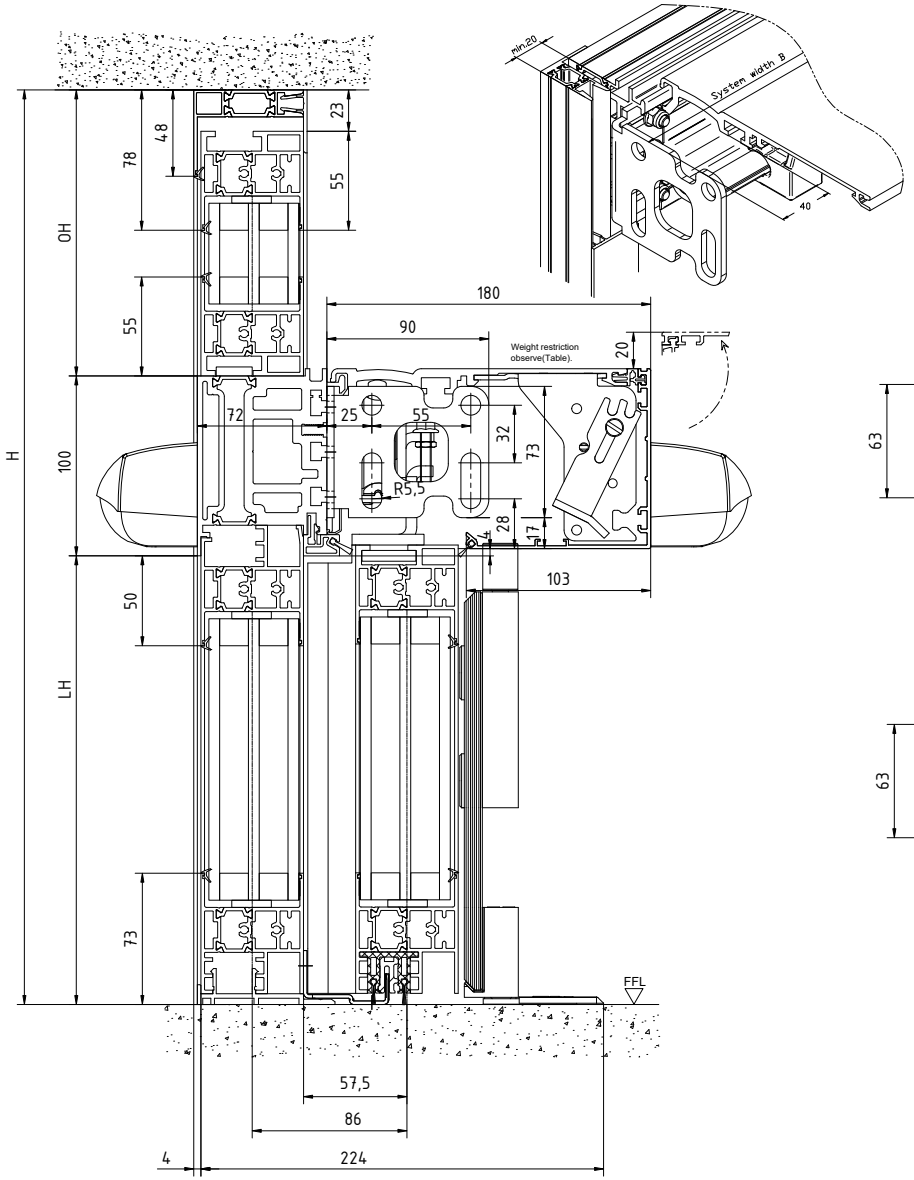

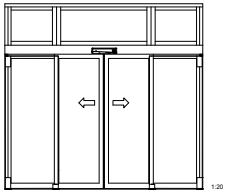

FFL	Finished floor level
LW	Passage width
LH	Clearance height
H	Installation height
	Noticed
X	According to EN 16005 / DIN 18650 Construction and testing principles for automatic. For doors, this dimension may only be 4 ÷ 8 mm.

Pro Green ES 250 PRO / ES 400 PRO	Weight
1-leaf LW 700 - 3000 B min. = 2 x LW + 153 (with fixed part / with post width 63mm)	1-leaf ES 250 PRO 1 x 125 kg ES 400 PRO 1 x 250 kg
2-leaf LW 800 - 3000 B min. = 2 x LW + 180 (with fixed part / without post width)	2-leaf Standard ES 250 PRO 2 x 125 kg ES 400 PRO 2 x 200 kg

For doors with side panels and LM supports (through mounting), from a door leaf weight of approx. 125kg - depending on the clear width of the door - either a drive suspension or the drive variant with a height of 150mm is required.

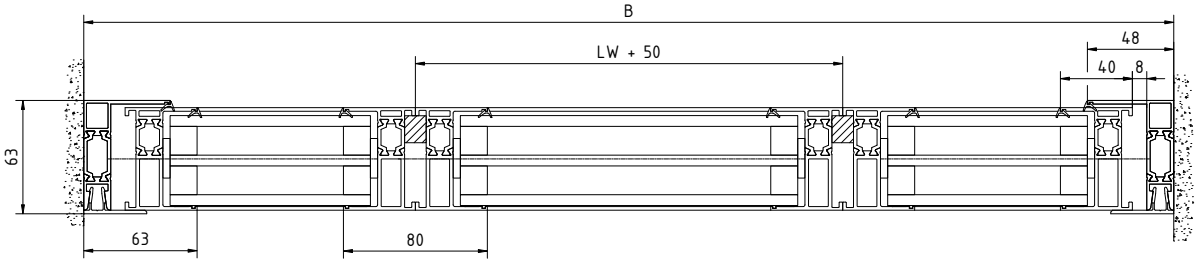

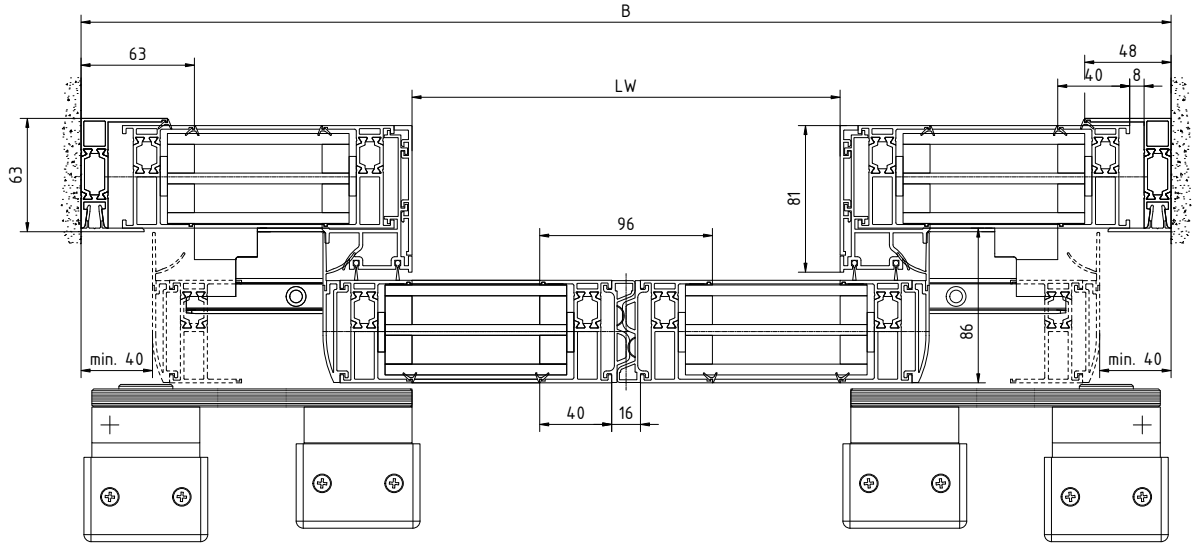

Attention !
the safety equipment of the automatic door must
correspond to the risk analysis according to DIN 18650

Transmitted as an electronic file document.
No liability for the accuracy of the document.
Modifications, changes, reproduction and distribution
strictly prohibited.
All rights reserved.
Subject to the general terms and conditions of dormakaba.

3				Date	Name	Material	© dormakaba GmbH+Co.KG (DE) Ennepetal
2			Drawn	10.2021	Rerlar		Scale:
1			Checked				Format: A0
No.	Change No. Date	Name	Name				Replaces:

dormakaba | 1:1 | ES PROLINE
Pro Green sliding door
insulating glass with fixed port - AS security leaf - floor guide | Drawing No. 257691-00-6-60 | Var. 00 | Sheet 1 of 1

Version as an electronic file document.
No liability for the accuracy of the document.
Modifications, changes, reproduction and distribution strictly prohibited.
All rights reserved.
Subject to the general terms and conditions of dormakaba.

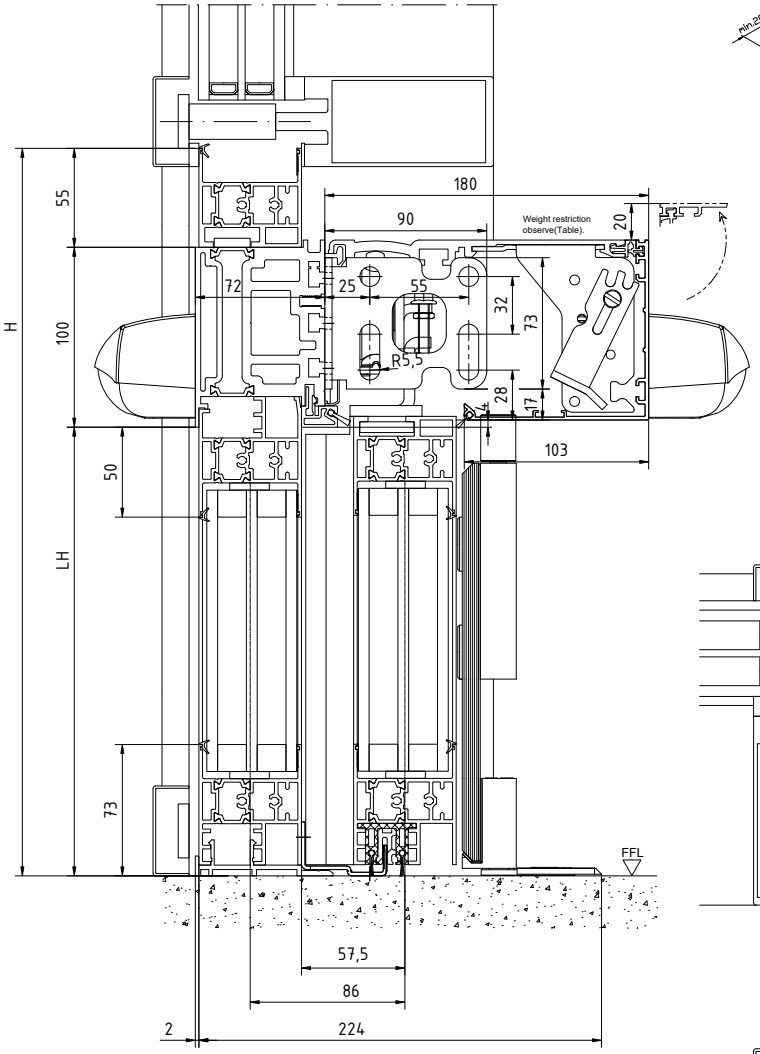

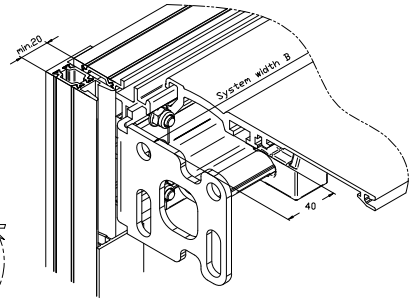

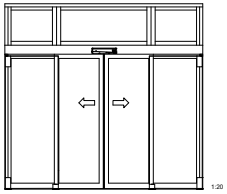

FFL	Finished floor level
LW	Passage width
LH	Clearance height
H	Installation height
	Noticed
X	According to EN 16005 / DIN 18650 Construction and testing principles for automatic. For doors, this dimension may only be 4 - 8 mm.

Pro Green ES 250 PRO / ES 400 PRO	Weight
1-leaf LW 700 - 3000 B min. = 2 x LW + 153 (with fixed part / with post width 63mm)	1-leaf ES 250 PRO 1 x 125 kg ES 400 PRO 1 x 250 kg
2-leaf LW 800 - 3000 B min. = 2 x LW + 180 (with fixed part / without post width)	2-leaf Standard ES 250 PRO 2 x 125 kg ES 400 PRO 2 x 200 kg

For doors with side panels and LM supports (through mounting), from a door leaf weight of approx. 125kg - depending on the clear width of the door - either a drive suspension or the drive variant with a height of 150mm is required.

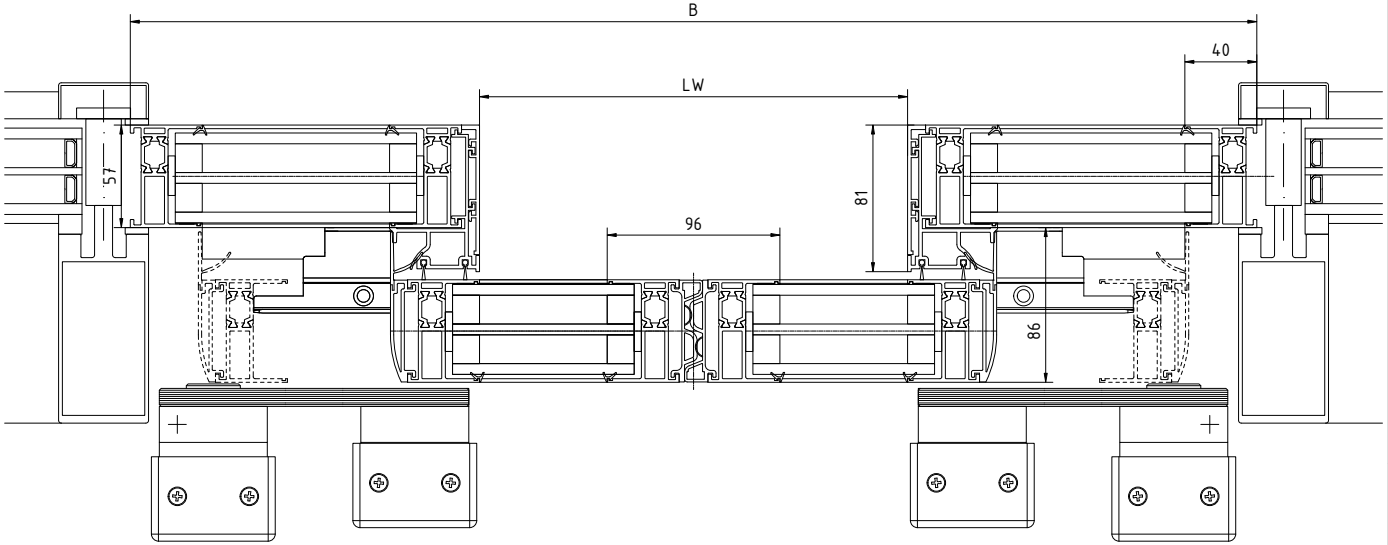

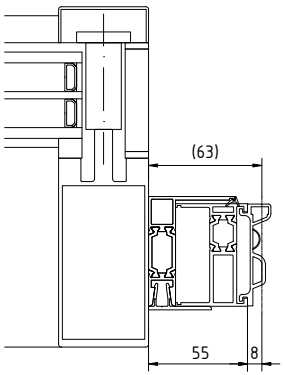

Attention !
the safety equipment of the automatic door must
correspond to the risk analysis according to DIN 18650

3					Date	Name	Material	dormakaba GmbH+Co.KG (DE) Ennepetal
2				Drawn	10.2021	Rerar		Scale:
1				Checked				Format: A0
No.	Change No.	Date	Name	Released				Replacem. :

dormakaba

1:1

ES PROLINE
Pro Green sliding door

insulating glass - with fixed part - to PR - AS security leaf - floor guide

Drawing-No.: 257691-00-6-60

Var.: 00

Sheet: 1 / 1

Transmittal and reproduction of this document, use and communication of its contents are not permitted without express permission. All rights reserved. Subject to technical modifications and alterations!

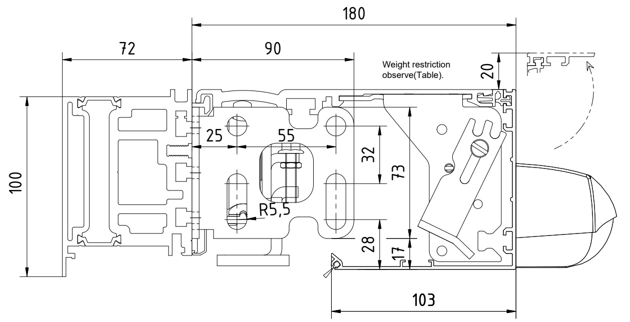

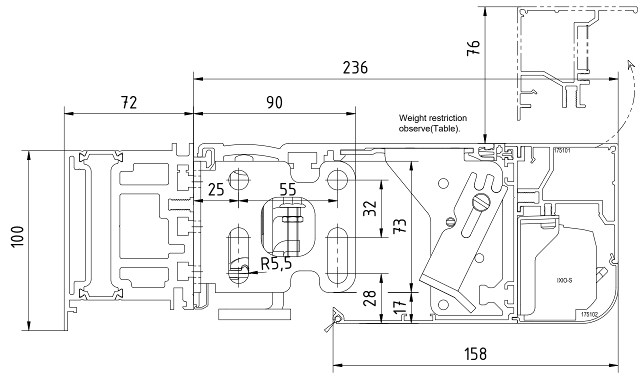

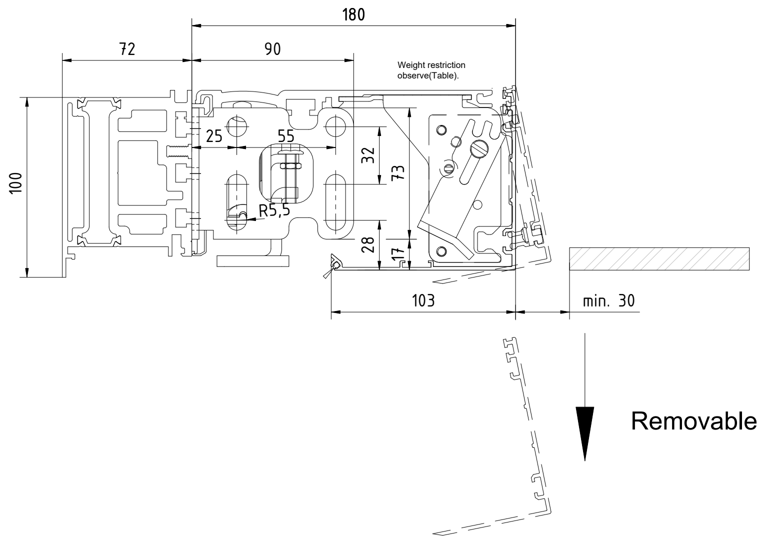

Removable drive cover

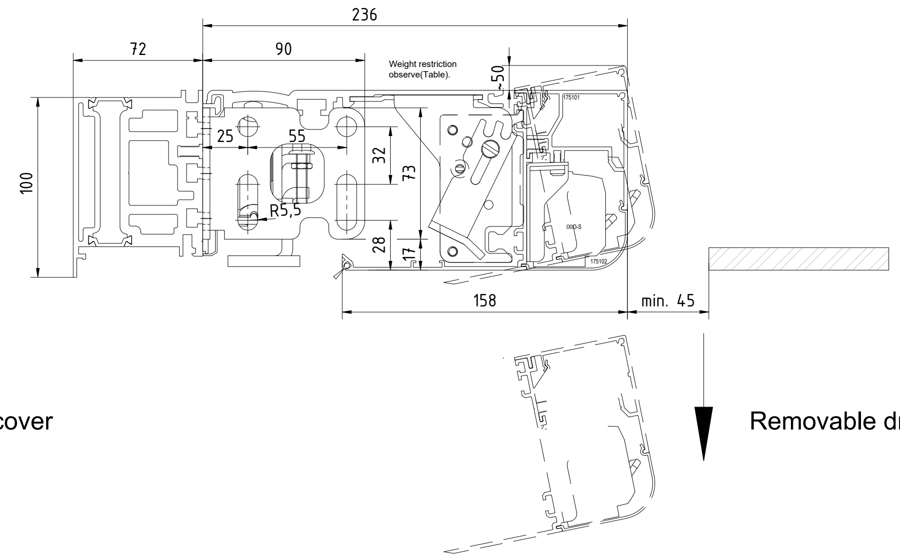

Removable drive cover

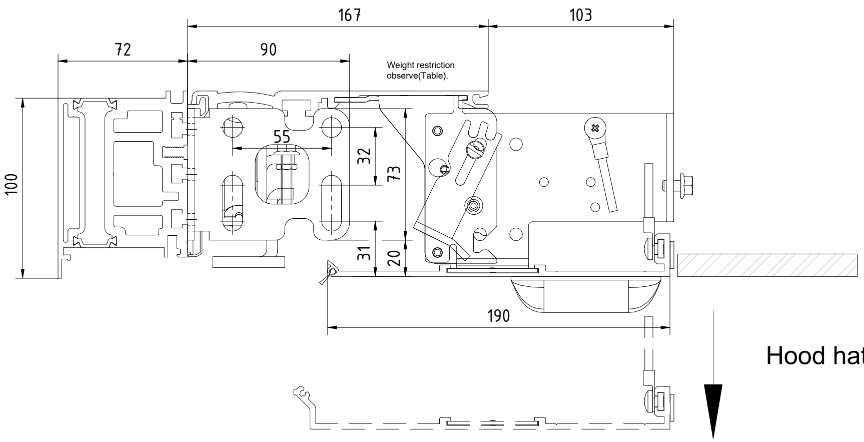

Hood hatch

Pro Green ES 250 PRO / ES 400 PRO	Weight
1-leaf LW 700 - 3000 B min. = 2 x LW + 153 (with fixed part / with post width 63mm)	1-leaf ES 250 PRO 1 x 125 kg ES 400 PRO 1 x 250 kg
2-leaf LW 800 - 3000 B min. = 2 x LW + 180 (with fixed part / without post width)	2-leaf Standard ES 250 PRO 2 x 125 kg ES 400 PRO 2 x 200 kg

For doors with side panels and LM supports (through mounting), from a door leaf weight of approx. 125kg - depending on the clear width of the door - either a drive suspension or the drive variant with a height of 150mm is required.

"Distribution and reproduction of this document, Use and communication of their content is not permitted, unless expressly granted. Violations oblige to pay compensation. All rights in the case Subject to the granting of patents or registration of utility models."

3					Date	Name	Material	© dormakaba GmbH+Co.KG (DE) Ennepetal
2				Drawn	10.2021	Wenzel		Issue:
1				Tested				Format: A0
Lfd No.	Change No. 50000000xxxx	Date	Name	Stand.				Replacem.:

dormakaba

Scale 1:1

ES PROLINE
Pro Green sliding door
mechanical covers

Drawing-No | Var. | Typ | Cond
257691-00-6-60

Sheet: von Bl.

Var.:

Pro Green ES 250 PRO / ES 400 PRO	Weight
1-leaf LW 700 - 3000 B min. = 2 x LW + 153 (with fixed part / with post width 63mm)	1-leaf ES 250 PRO 1 x 125 kg ES 400 PRO 1 x 250 kg
2-leaf LW 800 - 3000 B min. = 2 x LW + 180 (with fixed part / without post width)	2-leaf Standard ES 250 PRO 2 x 125 kg ES 400 PRO 2 x 200 kg

For doors with side panels and LM supports (through mounting), from a door leaf weight of approx. 125kg - depending on the clear width of the door - either a drive suspension or the drive variant with a height of 150mm is required.

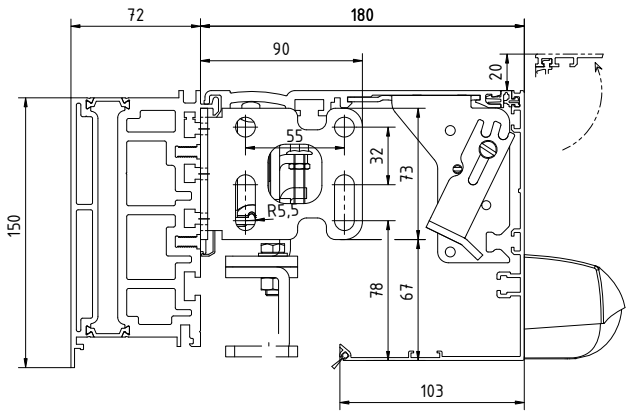

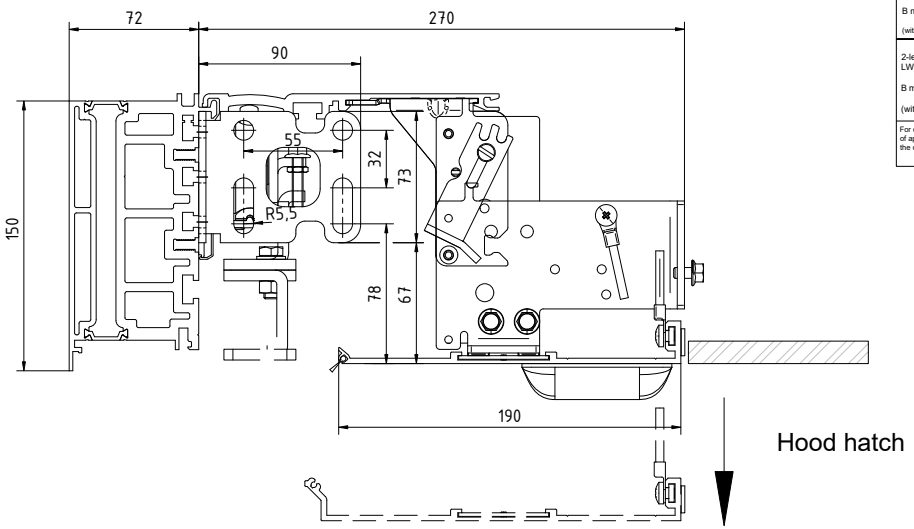

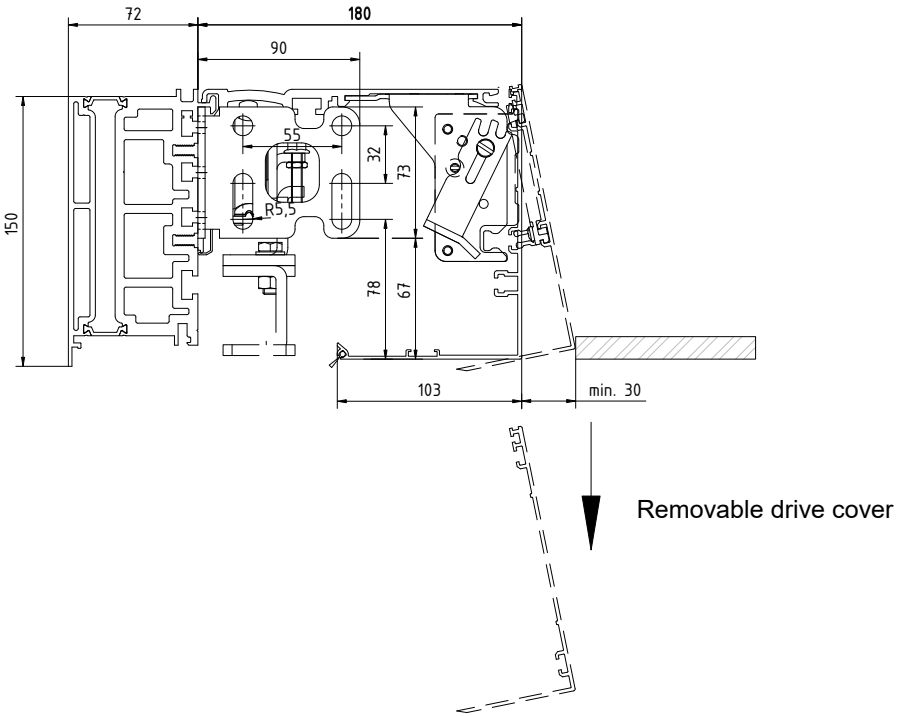

Transmission as well as reproduction of this document, use and disclosure of its contents are not permitted without express permission. All rights reserved in the case of the granting of a patent or the registration of a utility model or design.

				Date	Name	Material
3						
2						
1			Drawn	10.2021	Renz	
No.	Change No.	Date	Name	Checked		
				Norm		

dormakaba GmbH+Co.KG (DE) Eningen(de)

Scale: 1:1 | Format: A0 | Replaces: -

Drawing No.: 257691-00-6-60 | Var.: | Sheet: 1 of 1

dormakaba

1:1

ES PROLINE
Pro Green sliding door

mechanical covers

Var.: -

Pro Green ES 250 PRO / ES 400 PRO	Weight
1-leaf LW 700 - 3000 B min. = 2 x LW + 153 (with fixed part / with post width 63mm)	1-leaf ES 250 PRO 1 x 125 kg ES 400 PRO 1 x 250 kg
2-leaf LW 800 - 3000 B min. = 2 x LW + 180 (with fixed part / without post width)	2-leaf Standard ES 250 PRO 2 x 125 kg ES 400 PRO 2 x 200 kg

For doors with side panels and LM supports (through mounting), from a door leaf weight of approx. 125kg - depending on the clear width of the door - either a drive suspension or the drive variant with a height of 150mm is required.

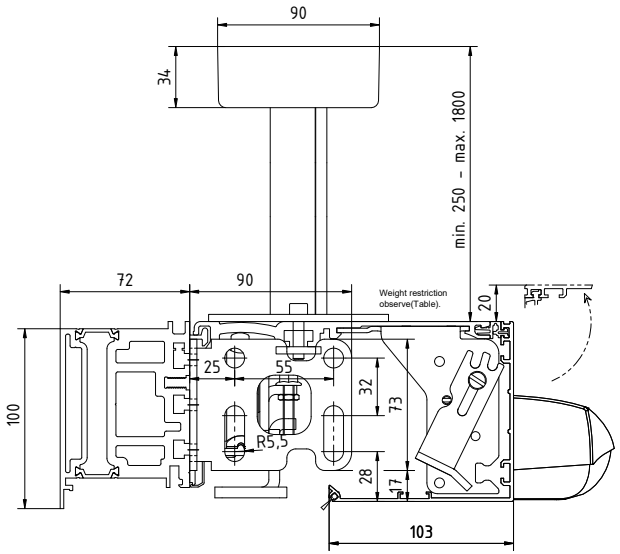

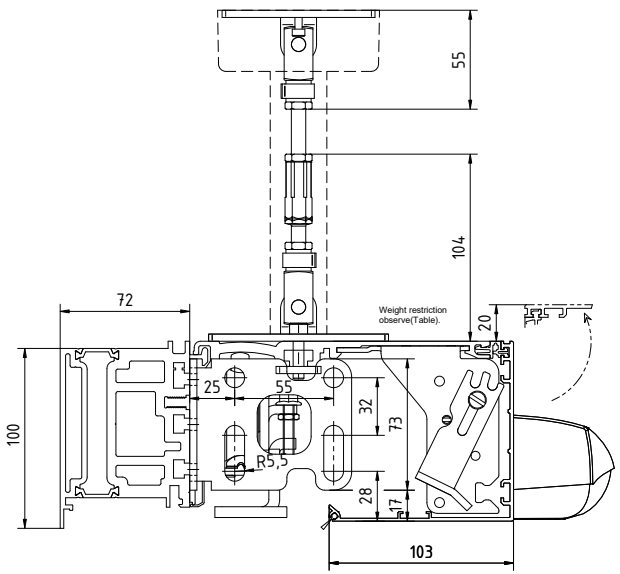

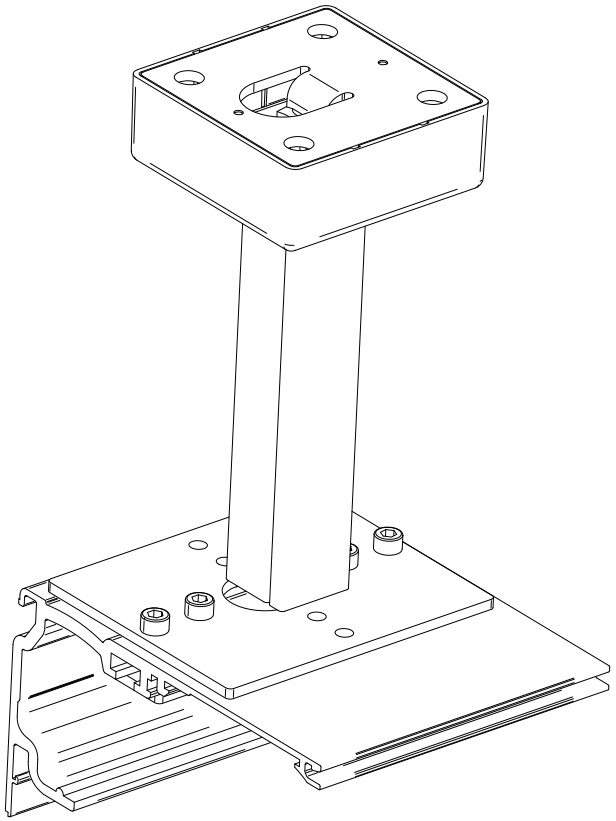

3					Date	Name	Material	dormakaba GmbH+Co.KG (DE) Ennepetal
2				Drawn	10.2021	Renz		Scale:
1				Checked				Format: A0
No.	Change No.	Date	Name	Revised				Replaces: -

dormakaba	1:1	ES PROLINE Pro Green sliding door Mechanism hanger	Drawing No. 257691-00-6-60	Var. -

Transmission as well as reproduction of this document, use and disclosure of its contents are prohibited. Violations will be prosecuted. All rights reserved, particularly for the case of patent grant or utility model registration.

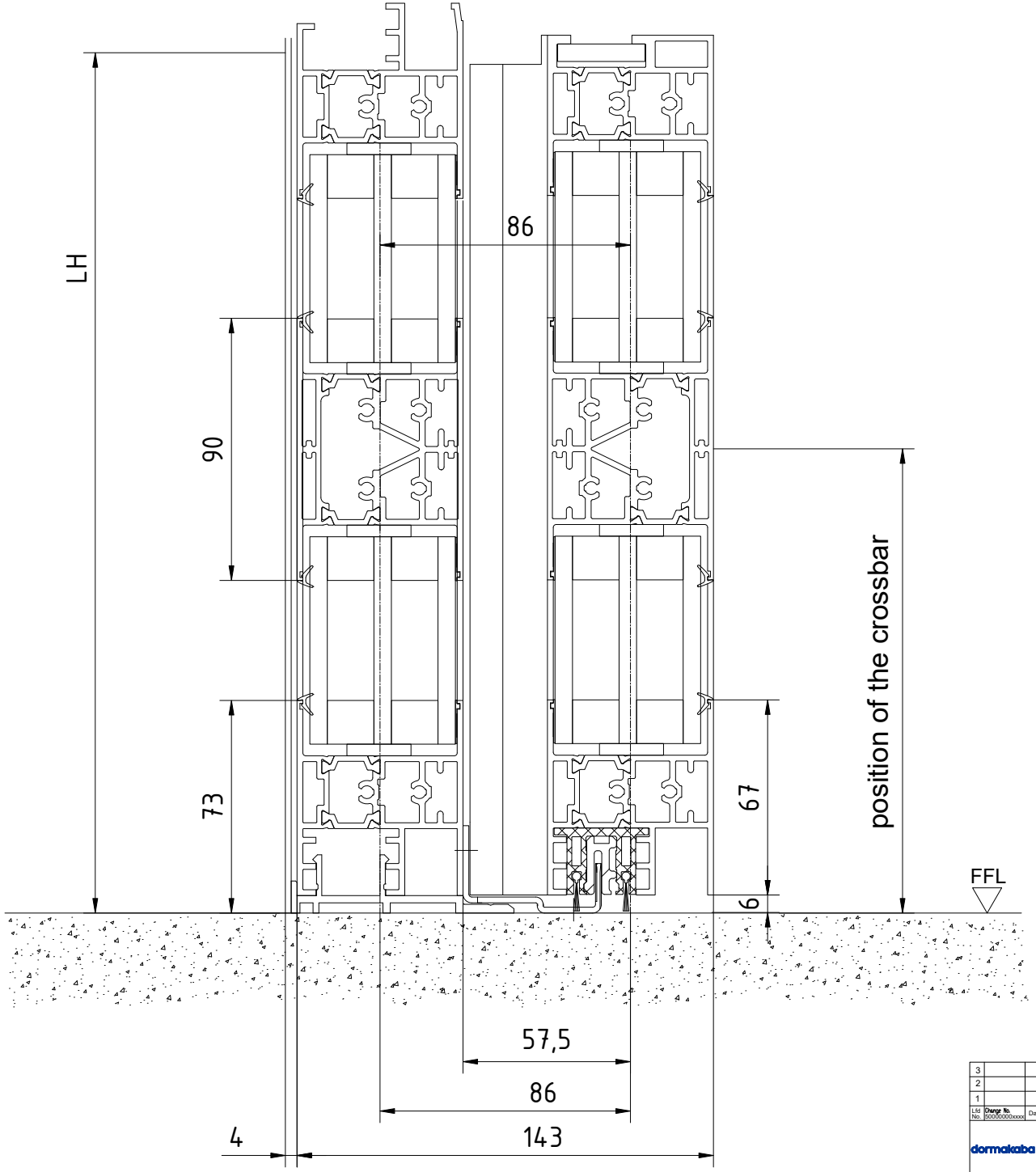

3					Date	Name	Material	© dormakaba GmbH+Co.KG (DE) Ennepetal
2				Drawn	10.2021	Wenzel		Issue:
1				Tested				Format: A2
Lfd No.	Change No. 50000000xxxx	Date	Name	Stand.				Replacem.:

dormakaba

Scale 1:1

ES PROLINE
Pro Green sliding door

crosses - insulating glass - without fixed part - floor guide

Drawing-No 257691-00-6-60 | Var. | Typ | Cond | Sheet: von Bl.

Var.:

"Distribution and reproduction of this document, use and communication of its contents is not permitted, unless expressly granted. Violators are liable to pay compensation. All rights in the case Subject to the granting of patents or registration of utility models."

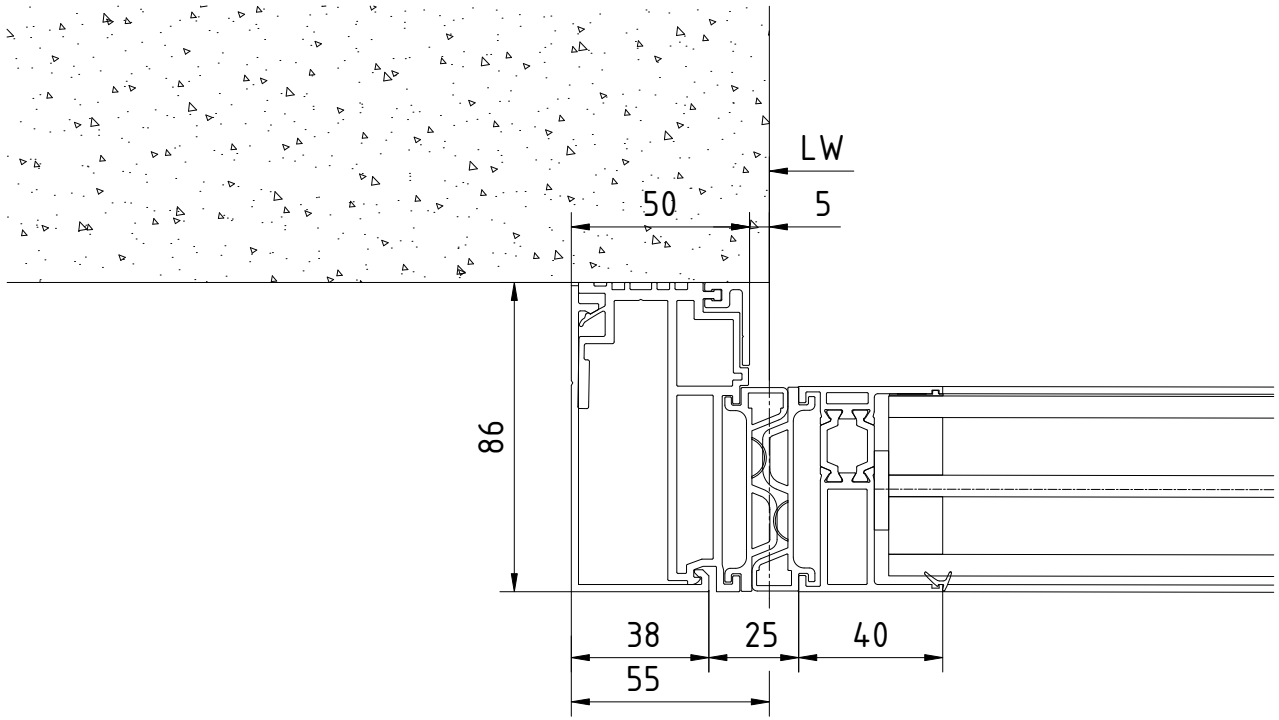

3					Date	Name	Material	© dormakaba GmbH+Co.KG (DE) Ennepetal
2				Drawn	10.2021	Wenzel		Issue:
1				Tested				Format: A2
Lfd No.	Change No. 50000000xxxx	Date	Name	Stand.				Replacem.:

dormakaba	Scale 1:1	ES PROLINE Pro Green sliding door receiving pole -insulating glass - without fixed part - floor guide	Drawing-No 257691-00-6-60 · Var. · Typ · Cond · Sheet: 1 von Bl. · Var.: 00

"Distribution and reproduction of this document, use and communication of its contents is not permitted, unless expressly granted. Violators are liable to pay compensation. All rights in the case Subject to the granting of patents or registration of utility models."